CD WELD STUDS

General Specifications 1
Capacitor Discharge Welding Process 2
CD Stud/Base Metal Combination Welding Capabilities 3
CD Stud Reverse Side Marking Limitations 4
CD Stud Weld Inspection 5
CD Stud Load Strengths 6
CD Studs Weight Charts 7
Flanged Annular Ring (Navy) 8
Mushroom Cap/Ann.Ring (MCAL) 8
Flanged (Threaded) 9
Flanged/Metric (Threaded) 9M
Small Flanged (Threaded) 10
Non Flanged (Threaded) 11
Flanged (No Thread) 12
Small Flanged (No Thread) 13
Non Flanged (No Thread) 14
Drawn Arc (Threaded) 15
Drawn Arc (No Thread) 16
Bi-Metallic Studs - Pin 17
Bi-Metallic Studs - Annular Ring 17
Bi-Metallic Studs - Notched End 17
Flanged Accoustical Hanger (Lagging) 18
CD Ground Studs 19
Special CD Studs 20

ARC WELD STUDS

Arc Stud Welding Process 1
Welded Steel Arc Studs Tensile 2
Torque Strengths 3
Arc Stud Weld Fillet Accommodation 4
Arc Stud Location Template & Bushing Design 5
Arc Stud Weld Inspection 6
Arc Stud Welding Recommendation Minimum Base Metal Thickness 7
Arc Stud Weight Charts 8
Standard Thread 9
Full Thread 10
Full Base 11
Long Reduced Base 12
Short Reduced Base 13
No Thread 14
Bent No Thread 15
Tapped - Full Base 16
Tapped - Reduced Base 17
Shoulder - Threaded 18
Shoulder - Annular Groove 19
Shoulder - No Thread 20
Collar 21
Bent Collar 22
Annular Ring (Navy) 23
Rectangular - Plain 24
Rectangular - "T" Slotted 25
Rectangular - With Hole 26
Knurled 27
Headed Concrete Anchor 28
Shear Connector 29

INSULATION FASTENERS

1. WELD PINS

Capacitor Discharge 1-1
Power Tip 1-2
Sure Fire 1-3
Conical Tip 1-4
Double Pointed 1-5
J-Hook 1-6

2. CUP HEAD WELD PINS

Cup Head Weld Pins (CD) 2-1
Cup Head Pin (Duro Dyne Style) 2-2

3. WASHERS, CAPS & NUTS

Self-Locking Washers (Square) 3-1
Self-Locking Washers (Round) 3-2
Capped Speed Washer 3-3
Lacing Washer 3-3
Lacing Ring 3-3
Annular Ring Cap 3-4
Keyhole Slotted Washer 3-4
Annular Groove Cap 3-5
Cap Setting Tool 3-5
Panel Nut 3-5
Combination Nut 3-6

4. INSULATION HANGERS

Spindle 4-1
Self-Stick 4-2
Self-Stick Guidelines 4-3
Nylon 4-4
Annular Ring Anchor Bolt 4-5
Threaded Anchor Bolt 4-6
Safing "Z" Clip 4-7

5. ADHESIVES

IHA-177 General Purpose 5-1
Directions For Use 5-2
Cautionary Information 5-3

6. LACING ANCHORS

Lacing Anchors 6-1
Slim Lacing Anchors 6-1S
Bergen Hook 6-2
Quilting Pins 6-3
Lacing Hook 6-4
L100 Lacing Washer 6-4
Lacing Ring 6-4

MIDWEST FASTENERS, INC

450 Richard St, Miamisburg, OH 45342 | Toll Free: 800-852-8352 | Fax: 937-866-4174 | www.midwestfasteners.com

All information contained herein is subject to change without notice.

Phone: 1-800-852-8352 • FAX: 937-866-4174
website: www.midwestfasteners.com

CD WELD STUDS

SPECIFICATION GUIDE

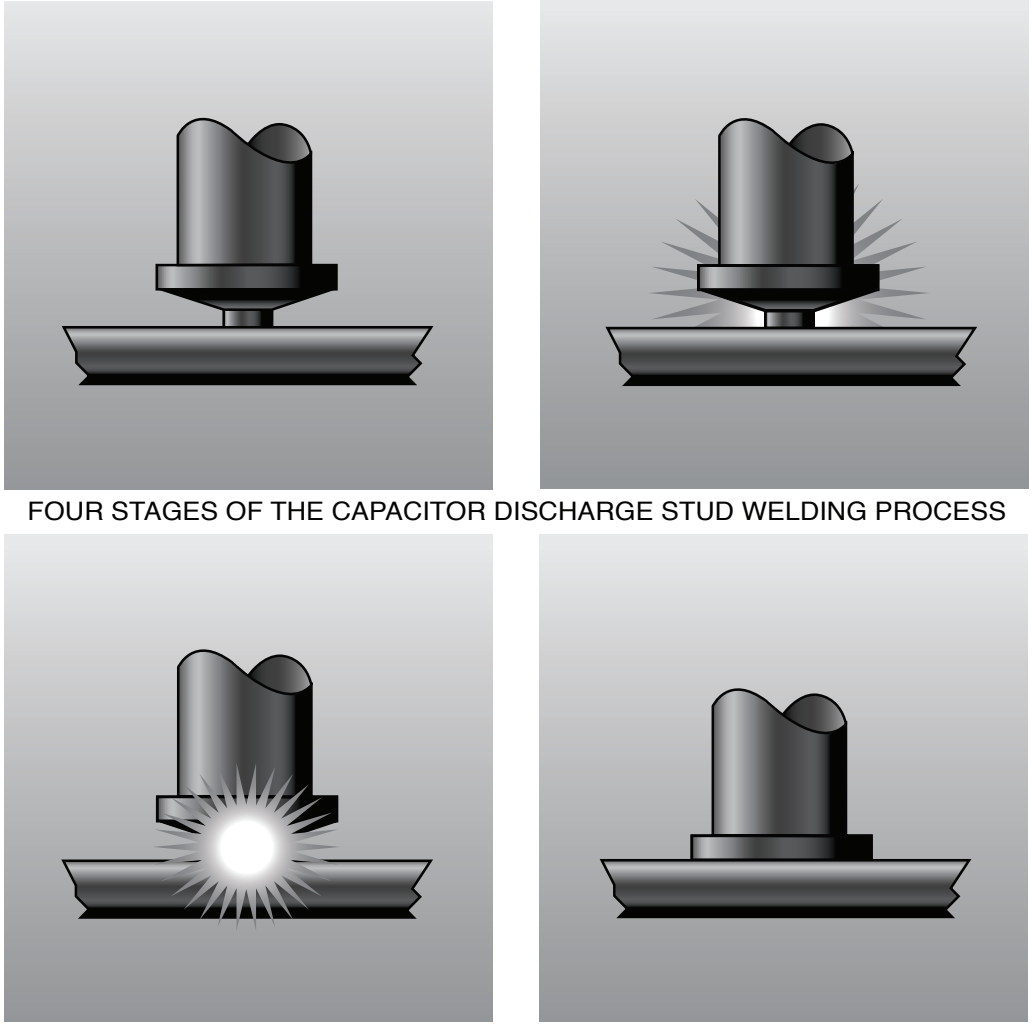

FOUR STAGES OF THE CAPACITOR DISCHARGE STUD WELDING PROCESS

TABLE OF CONTENTS

C.D. STUDS

General Specifications 1
Capacitor Discharge Welding Process 2
CD Stud/Base Metal Combination
Welding Capabilities 3
CD Stud Reverse Side Marking
Limitations 4
CD Stud Weld Inspection..... 5
CD Stud Load Strengths 6
CD Studs Weight Charts 7
Flanged Annular Ring (Navy)..... 8
Mushroom Cap/Ann.Ring (MCAL)..... 8
Flanged (Threaded)..... 9
Flanged/Metric (Threaded) 9M
Small Flanged (Threaded)..... 10
Non Flanged (Threaded) 11
Flanged (No Thread)..... 12
Small Flanged (No Thread)..... 13
Non Flanged (No Thread) 14
Drawn Arc (Threaded) 15
Drawn Arc (No Thread) 16
Bi-Metallic Studs - Pin..... 17
Bi-Metallic Studs - Annular Ring 17
Bi-Metallic Studs - Notched End..... 17
Flanged Accoustical Hanger (Lagging) 18
CD Weld Studs 19
Special CD Studs 20

MIDWEST FASTENERS
GENERAL SPECIFICATIONS

	CAPACITOR DISCHARGE	*ARC*
MATERIAL:	Standard in low carbon steel, 302/304/305 stainless, and 1100, 6061, and 5000 series aluminum. Brass and other grades of stainless steel are also available.	Standard in low carbon steel and 302/304/305 stainless. Aluminum, monel, inconel, and other grades of stainless steel are available.
PLATING:	Copper plating is standard. Cadmium, nickel, zinc, and other platings are available.	Cadmium to ASTM-A 165 type TS, zinc to ASTM-B 633 (formerly A 164) and other platings are available. Non-weldable plating is removed from the weld end to avoid contamination of the weld.
ANNEALING:	All low carbon steel and stainless steel studs are annealed where required.	Low carbon steel can be annealed to a maximum of 75 Rockwell B and stainless steel to a maximum of 90 Rockwell B.
THREADS:	UNC-2A is standard for external threads prior to plating and UNC-2B for internal threads. For metric and other thread sizes contact the MIDWEST FASTENERS Customer Service Department.	
WELD BASE:	Flanged, small-flanged, and non-flanges are available.	1/4" dia. and over have solid flux. Diameters under 1/4" are standard pointed, and flux is optional.
STUD LENGTH:	CD studs have no appreciable length reduction after welding.	MIDWEST FASTENERS arc stud length designations are BEFORE WELD; AFTERWELD lengths are shown in the table below.

STUD DIAMETER	*APPROX. REDUCTION*
3/16" thru 1/2"	1/8"
5/8" thru 7/8"	3/16"
7/8" and over	1/4"
1/8" wide rectangulars	1/8"

FERRULES:	Does not apply to CD	All orders include ferrules when they are required.

450 Richard St, Miamisburg, OH 45342 | Toll Free: 800-852-8352 | Fax: 937-866-4174 | www.midwestfasteners.com

All information contained herein is subject to change without notice.

THE MIDWEST FASTENERS CAPACITOR DISCHARGE (CD) STUD WELDING PROCESS

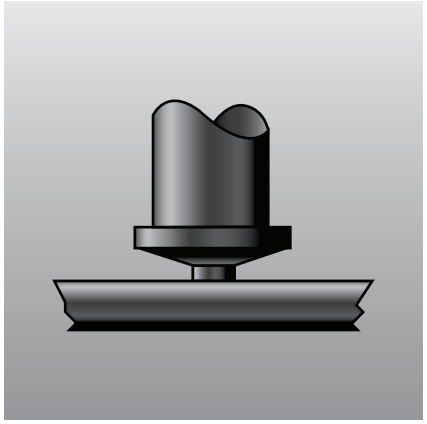

1. STUD AGAINST WORK.

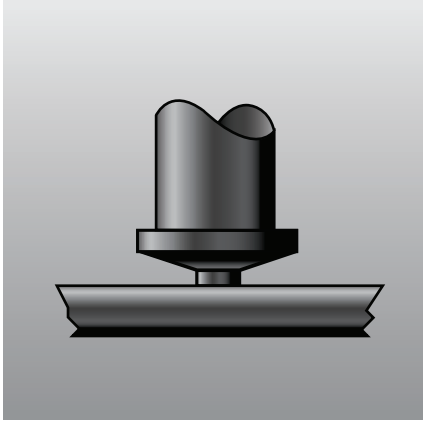

2. STORED ENERGY DISCHARGED THROUGH SPECIAL WELD "TIMING" TIP AND STUD STARTS DOWNWARD.

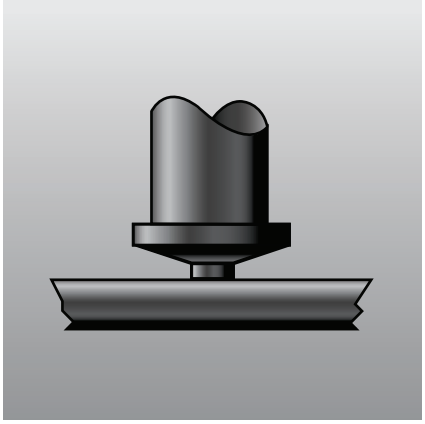

3. STUD FORCED INTO MOLTEN METAL.

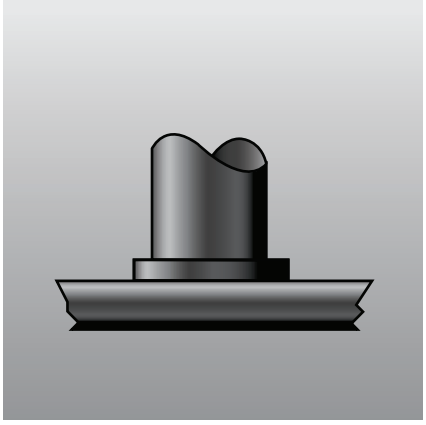

4. METAL SOLIDIFIES AND WELD IS COMPLETED IN MILLISECONDS.

Capacitor Discharge (CD) Stud Welding involves the same basic principles and metallurgical aspects as any other arc welding procedure. When the MIDWEST FASTENERS weld gun is activated, a special precision weld tip initiates a controlled electric arc from the welder capacitor bank which melts the end of the stud and a portion of the base metal. The stud is held in place as the molten metal solidifies instantly accomplishing a high quality fusion weld.

CD Stud Welding is generally used to weld smaller diameter studs to thin base metals, especially where reverse side marking is not permissible. Since the entire weld cycle is completed in milliseconds, welds can be made to thin material without pronounced distortion, burn-through or reverse side discoloration. As long as one end of stud is designed for CD welding, CD studs can be manufactured in almost any shape.

CD Stud Welding is compatible with just about any weldable material, and permits the welding if dissimilar metals.

450 Richard St, Miamisburg, OH 45342 | Toll Free: 800-852-8352 | Fax: 937-866-4174 | www.midwestfasteners.com

All information contained herein is subject to change without notice.

MIDWEST FASTENERS
CD STUD/BASE METAL COMBINATION WELDING CAPABILITIES RECOMMENDATIONS

BASE WELD SURFACE MATERIAL	*STUD MATERIAL*			
	MILD STEEL 1008, 1010	*STAINLESS* 304, 305	*ALUMINUM* 1100, 6061	*BRASS* 70-30, 65-35
MILD STEEL 1006 through 1030	Excellent	Excellent	—	Excellent
MEDIUM CARBON STEEL 1030 through 1050	Good*	Good*	—	Good*
GALVANIZED SHEET DUCT OR DECKING	Excellent	Excellent	—	—
STRUCTURAL STEEL	Excellent	Excellent	—	Excellent
STAINLESS STEEL 405, 410, 430, and 330 Series, except 303	Excellent	Excellent	—	Excellent
LEAD FREE BRASS, ELECTROLYTIC COPPER, LEAD-FREE ROLLED COPPER	Excellent	Excellent	—	Excellent
MOST ALUMINUM ALLOYS OF THE 1100, 3000, 5000, AND 6000 SERIES**	—	—	Excellent	—
DIE-CAST ZINC ALLOYS	Good*	Good*	Excellent	Good*

*Good: Generally full strength results, depending upon the combination of stud size and base metal.

**Other materials, such as 7000 Series aluminum, titanium alloys, Inconel, etc, can be welded under specific conditions.

CD STUD REVERSE-SIDE MARKING LIMITATIONS

The charts on the following page will be of help in determining the best combination of stud weld base size and base metal thickness. The terms on the chart are defined as follows:
EXCELLENT—No marking, excellent weld.
ACCEPTABLE—Visible markings, excellent weld.
UNACCEPTABLE—Unacceptable marking, base metal failure.

It should be noted that the MIDWEST FASTENERS charts are based on optimum laboratory conditions. Even under optimum conditions, it is difficult to determine the precise point at which reverse-side marking will appear. Therefore, these charts should be used only as a guide. For further assistance contact the MIDWEST FASTENERS Customer Service Department.

MIDWEST FASTENERS, INC
450 Richard St, Miamisburg, OH 45342 | Toll Free: 800-852-8352 | Fax: 937-866-4174 | www.midwestfasteners.com

All information contained herein is subject to change without notice.

HOW TO FIND THE OPTIMUM COMBINATION OF STUD SIZE AND BASE METAL THICKNESS IN ORDER TO PREVENT REVERSE-SIDE MARKING

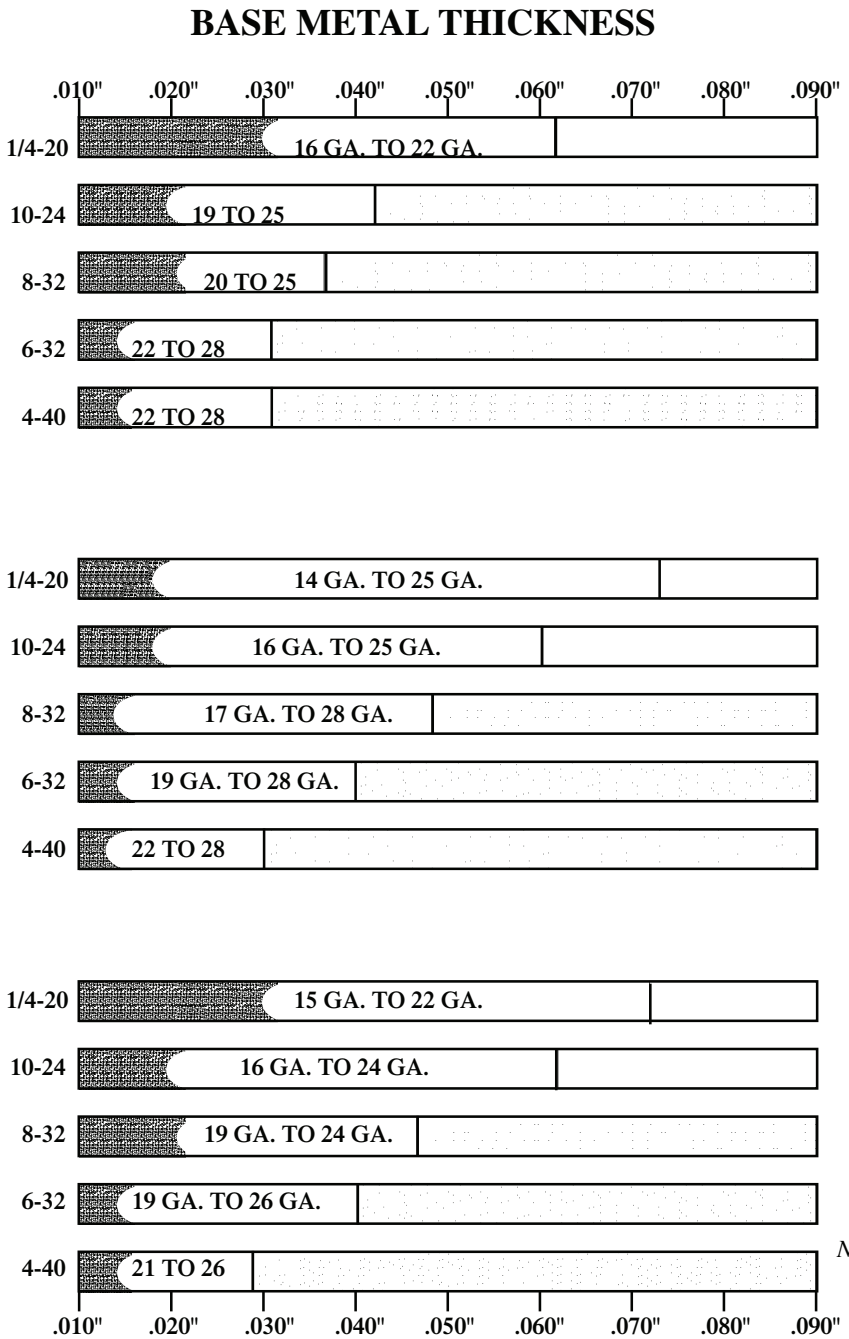

UNACCEPTABLE

ACCEPTABLE

EXCELLENT

MILD STEEL
BASE METAL: Mild Steel
STUD: Mild Steel, Flanged or Small Flanged

STAINLESS STEEL
BASE METAL: Stainless Steel
STUD: Stainless Steel, Flanged or Small Flanged

ALUMINUM
BASE METAL: Aluminum
STUD: Aluminum, Flanged or Small Flanged

NOTE: Stud tip size can influence the degree of reverse-side marking.

450 Richard St, Miamisburg, OH 45342 | Toll Free: 800-852-8352 | Fax: 937-866-4174 | www.midwestfasteners.com

All information contained herein is subject to change without notice.

CD STUD WELD INSPECTION (VISUAL)

The MIDWEST FASTENERS CD stud weld can be visually inspected by observing the fillet at the base of the stud. The illustrations and comments below will assist you in visually judging the quality of the weld.

GOOD
Full, even fillet all around stud.

COLD
No or uneven fillet.

HOT
Large crater-excessive metal expulsion, very shiny appearance.

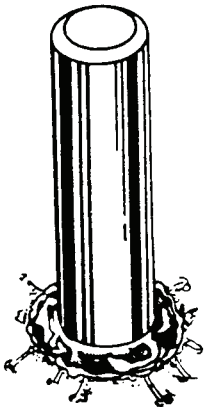

MIDWEST FASTENERS, INC
450 Richard St, Miamisburg, OH 45342 | Toll Free: 800-852-8352 | Fax: 937-866-4174 | www.midwestfasteners.com

All information contained herein is subject to change without notice.

MIDWEST FASTENER CD STUD LOAD STRENGTHS

STUD MATERIAL	*STUD SIZE*	*MAXIMUM FASTENING TORQUE (Inch Lbs.)**	*ULTIMATE TENSILE LOAD (Lbs.)*	*MAXIMUM SHEAR LOAD (Lbs.)*
LOW-CARBON, COPPER-FLASHED STEEL	6-32	6	500	375
	8-32	12	765	575
	10-24	14	960	720
	1/4-20	43	1750	1300
	5/16-18	72	2900	2200
	3/8-16	106	4300	3250
STAINLESS STEEL 304	6-32	10	790	590
	8-32	20	1260	940
	10-24	23	1530	1150
	1/4-20	75	2880	2160
	5/16-18	126	3750	5350
	3/8-16	185	4850	7150
ALUMINUM ALLOY 1100	6-32	2.5	200	125
	8-32	5	295	185
	10-24	6.5	380	235
	1/4-20	21.5	670	415
	5/16-18	36	1125	695
	3/8-16	53	1660	1000
ALUMINUM ALLOY 6061	6-32	6.5	350	160
	8-32	13	560	229
	10-24	19	670	310
	1/4-20	40	1240	679
	5/16-18	70.5	2025	1210
	3/8-16	100	2985	1750
BRASS 70-30 (260) 65-35 (268)	6-32	8	600	390
	8-32	16	860	560
	10-24	18.5	1040	680
	1/4-20	61	1950	1275
	5/16-18	102	3280	2140
	3/8-16	150	4800	3160

*These values should develop fastener tension to slightly less than yield point.

450 Richard St, Miamisburg, OH 45342 | Toll Free: 800-852-8352 | Fax: 937-866-4174 | www.midwestfasteners.com

All information contained herein is subject to change without notice.

CD STUDS WEIGHT CHARTS (FLANGED-STEEL)

ESTIMATED WEIGHTS OF MIDWEST FASTENER THREADED STUDS IN POUNDS PER 1000 PIECES						
LENGTH	**4-40**	**6-32**	**8-32**	**10-24**	**1/4-20**	**5/16-18**
1/4	.69	1.00	1.39	1.79	3.08	4.90
3/8	.94	1.38	1.93	2.50	4.37	6.98
1/2	1.18	1.76	2.49	3.21	5.66	9.06
5/8	1.43	2.13	3.04	3.93	6.95	11.13
3/4	1.67	2.51	3.60	4.64	8.24	13.21
7/8	1.92	2.89	4.15	5.35	9.52	15.29
1	2.16	3.26	4.71	6.07	10.81	17.36
1-1/4	2.65	4.02	5.82	7.50	13.39	21.52
1-1/2	3.15	4.77	6.93	8.92	15.96	25.67
1-3/4	3.64	5.52	8.04	10.35	18.54	29.83
2	4.13	6.27	9.15	11.78	21.12	33.98
2-1/4	4.62	7.03	10.26	13.21	23.69	38.14
2-1/2	5.11	7.78	11.37	14.63	27.27	42.29
EACH ADD'L INCH	1.96	3.01	4.44	5.71	10.31	16.62

ESTIMATED WEIGHTS OF MIDWEST FASTENER NON-THREADED STUDS IN POUNDS PER 1000 PIECES						
LENGTH	**3/32**	**1/8**	**5-32**	**3/16**	**1/4**	**5/16**
1/4	.68	1.06	1.59	2.24	3.87	5.97
3/8	.92	1.50	2.27	3.21	5.61	8.68
1/2	1.16	1.93	2.94	4.19	7.35	11.39
5/8	1.40	2.37	3.62	5.16	9.09	14.11
3/4	1.64	2.80	4.30	6.14	10.84	16.82
7/8	1.88	3.24	4.98	7.12	12.56	19.53
1	2.12	3.67	5.65	8.09	14.32	22.25
1-1/4	2.60	4.54	7.01	10.04	17.81	27.67
1-1/2	3.08	5.41	8.36	11.99	21.69	33.10
1-3/4	3.56	6.28	9.72	13.95	24.78	38.52
2	4.04	7.15	11.07	15.90	28.26	43.95
2-1/4	4.52	8.02	12.43	17.85	31.75	49.37
2-1/2	5.00	8.89	13.78	19.80	35.23	54.80
EACH ADD'L INCH	1.92	3.48	5.42	7.81	13.94	21.70

MIDWEST FASTENERS, INC

450 Richard St, Miamisburg, OH 45342 | Toll Free: 800-852-8352 | Fax: 937-866-4174 | www.midwestfasteners.com

All information contained herein is subject to change without notice.

FLANGED ANNULAR RING (NAVY)

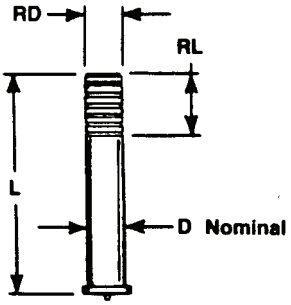

STUD

NOM D	MIN. L	RD	RL
1/8	3/4	.122	.312
3/16	3/4	.175	.312

MATERIAL:	**LOW CARBON STEEL** CONFORMS TO MIL-S-24149 Type: VI Class: III	**STAINLESS STEEL** CONFORMS TO MIL-S-24149 Type: VIII Class: III
MECHANICAL PROPERTIES:	Tensile 60,000 psi (min.) Yield 50,000 psi (min.) Elongation 20% (in 2 inches)	Values for various grades available upon request.
PLATING:	Copper coating is standard.	Does not apply to Stainless Steel.

TO ORDER OR SPECIFY, GIVE:

1. Product Code ..... CD F-AR
2. Diameter ..... D
3. Length L
4. Material .....

MCAL

"Mushroom Cap" (Aluminum)

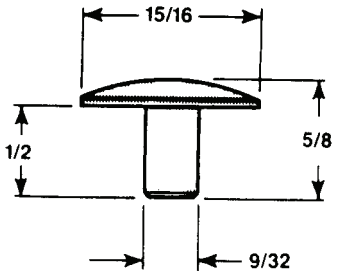

STUD SIZE	CAP PART NO.
3/16	MCAL-625-875

NOTE: AR CAP is sold separately. Not a component part of stud.

450 Richard St, Miamisburg, OH 45342 | Toll Free: 800-852-8352 | Fax: 937-866-4174 | www.midwestfasteners.com

All information contained herein is subject to change without notice.

FLANGED

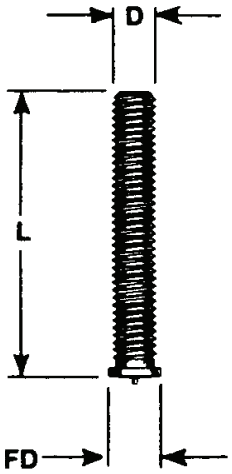

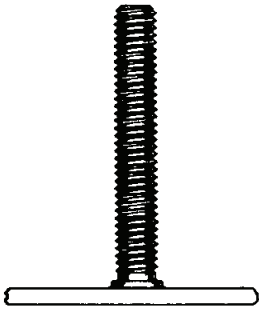

STUD

D	FD	MIN. L
4-40	.187	.250
6-32	.218	.250
8-32	.250	.250
10-32	.250	.250
10-24	.250	.250
1/4-20	.312	.375
5/16	.375	.500
3/8-16	.437	.500

MATERIAL:	**LOW CARBON STEEL** C - 0.23% max. P - 0.04% max. Mn - 0.90% max. S - 0.05% max.	**STAINLESS STEEL** AISI grade - 302/304/305 std. Other grades available upon request.
MECHANICAL PROPERTIES:	Tensile 60,000 psi (min.) Yield 50,000 psi (min.) Elongation 20% (in 2 inches)	Values for various grades available upon request.
PLATING:	Copper plating is standard.	Does not apply to Stainless.
ANNEALING:	Studs are annealed where required.	Studs are annealed where required.
MATERIAL:	**ALUMINUM** ALLOY—1100 & 5000 series Other alloys available upon request.	**BRASS** ALLOY—(lead free) 70-30 std. Other alloys available upon request.
MECHANICAL PROPERTIES:	Values for various alloys available upon request.	Values for various alloys available upon request.

TO ORDER OR SPECIFY, GIVE:

1. Product Code.....CD F
2. Diameter.....D
3. Length L
3. Material .....

MIDWEST FASTENERS, INC
450 Richard St, Miamisburg, OH 45342 | Toll Free: 800-852-8352 | Fax: 937-866-4174 | www.midwestfasteners.com

All information contained herein is subject to change without notice.

FLANGED/METRIC

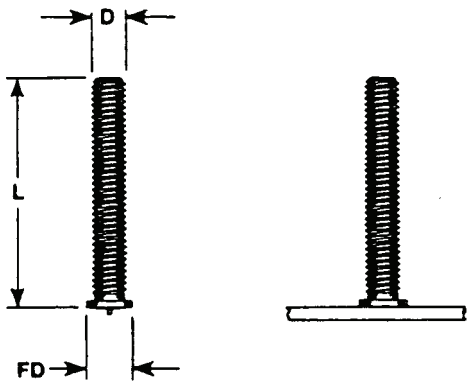

STUD

D	FD	MIN. L
M3 X .50	5.5	6
M4 X .70	6.4	6
M5 X .80	6.8	10
M6 X 1.00	8	10
M8 X 1.25	9.8	12

*All dimensions in millimeters

MATERIAL:	**LOW CARBON STEEL** C - 0.23% max. P - 0.04% max. Mn - 0.90% max. S - 0.05% max.	**STAINLESS STEEL** AISI grade - 302/304/305 std. Other grades available upon request.
MECHANICAL PROPERTIES:	Tensile 60,000 psi (min.) Yield 50,000 psi (min.) Elongation 20% (in 2 inches)	Values for various grades available upon request.
PLATING:	Copper plating is standard.	Does not apply to Stainless.
ANNEALING:	Studs are annealed where required.	Studs are annealed where required.
MATERIAL:	**ALUMINUM** ALLOY—1100 & 5000 series Other alloys available upon request.	**BRASS** ALLOY—(lead free) 70-30 std. Other alloys available upon request.
MECHANICAL PROPERTIES:	Values for various alloys available upon request.	Values for various alloys available upon request.

TO ORDER OR SPECIFY, GIVE:

1. Product Code.....CD F
2. Diameter.....D
3. Length L
3. Material .....

450 Richard St, Miamisburg, OH 45342 | Toll Free: 800-852-8352 | Fax: 937-866-4174 | www.midwestfasteners.com

All information contained herein is subject to change without notice.

SMALL FLANGED

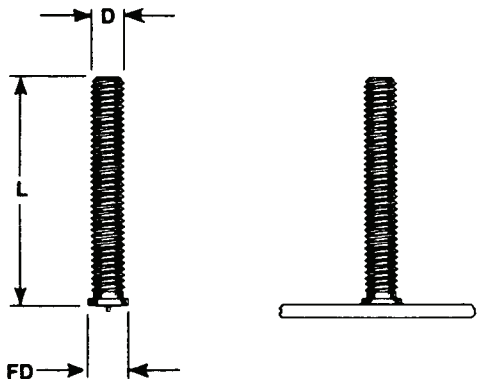

STUD		
D	FD	MIN. L
4-40	.143	.250
6-32	.169	.250
8-32	.195	.250
10-32	.221	.250
10-24	.221	.250
1/4-20	.281	.375
5/16-18	.342	.500

MATERIAL:	**LOW CARBON STEEL** C - 0.23% max. P - 0.04% max. Mn - 0.90% max. S - 0.05% max.	**STAINLESS STEEL** AISI grade - 302/304/305 std. Other grades available upon request.
MECHANICAL PROPERTIES:	Tensile 60,000 psi (min.) Yield 50,000 psi (min.) Elongation 20% (in 2 inches)	Values for various grades available upon request.
PLATING:	Copper plating is standard.	Does not apply to Stainless.
ANNEALING:	Studs are annealed where required.	Studs are annealed where required.
MATERIAL:	**ALUMINUM** ALLOY—1100 & 5000 series Other alloys available upon request.	**BRASS** ALLOY—(lead free) 70-30 std. Other alloys available upon request.
MECHANICAL PROPERTIES:	Values for various alloys available upon request.	Values for various alloys available upon request.

TO ORDER OR SPECIFY, GIVE:

1. Product Code.....CD SF
2. Diameter.....D
3. Length L
3. Material .....

MIDWEST FASTENERS, INC
450 Richard St, Miamisburg, OH 45342 | Toll Free: 800-852-8352 | Fax: 937-866-4174 | www.midwestfasteners.com

All information contained herein is subject to change without notice.

NON FLANGED

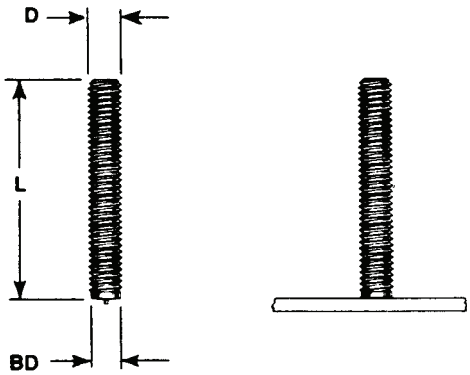

STUD		
D	MAX. BD	MIN. L
4-40	.116	.250
6-32	.142	.250
8-32	.168	.250
10-32	.194	.250
10-24	.194	.250
1/4-20	.252	.375
5/16-18	.315	.500

MATERIAL:	**LOW CARBON STEEL** C - 0.23% max. P - 0.04% max. Mn - 0.90% max. S - 0.05% max.	**STAINLESS STEEL** AISI grade - 302/304/305 std. Other grades available upon request.
MECHANICAL PROPERTIES:	Tensile 60,000 psi (min.) Yield 50,000 psi (min.) Elongation 20% (in 2 inches)	Values for various grades available upon request.
PLATING:	Copper plating is standard.	Does not apply to Stainless.
ANNEALING:	Studs are annealed where required.	Studs are annealed where required.
MATERIAL:	**ALUMINUM** ALLOY—1100 & 5000 series Other alloys available upon request.	**BRASS** ALLOY—(lead free) 70-30 std. Other alloys available upon request.
MECHANICAL PROPERTIES:	Values for various alloys available upon request.	Values for various alloys available upon request.

TO ORDER OR SPECIFY, GIVE:

1. Product Code.....CD NF
2. Diameter.....D
3. Length L
3. Material .....

450 Richard St, Miamisburg, OH 45342 | Toll Free: 800-852-8352 | Fax: 937-866-4174 | www.midwestfasteners.com

All information contained herein is subject to change without notice.

FLANGED—NO THREAD

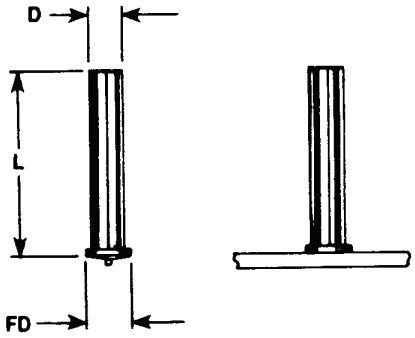

STUD

D		FD	MIN. L
	3/32	.174	.250
.115		.203	.250
	1/8	.187	.250
.141		.218	.250
	5/32	.250	.250
.161		.250	.250
	3/16	.250	.250
.215		.312	.250
	1/4	.312	.375
.273		.375	.375
	5/16	.375	.500

MATERIAL:	**LOW CARBON STEEL** C - 0.23% max. P - 0.04% max. Mn - 0.90% max. S - 0.05% max.	**STAINLESS STEEL** AISI grade - 302/304/305 std. Other grades available upon request.
MECHANICAL PROPERTIES:	Tensile 60,000 psi (min.) Yield 50,000 psi (min.) Elongation 20% (in 2 inches)	Values for various grades available upon request.
PLATING:	Galvanized and Copper plating are available.	Does not apply to Stainless.
ANNEALING:	Studs are annealed where required.	Studs are annealed where required.
MATERIAL:	**ALUMINUM** ALLOY—1100 & 5000 series Other alloys available upon request.	**BRASS** ALLOY—(lead free) 70-30 std. Other alloys available upon request.
MECHANICAL PROPERTIES:	Values for various alloys available upon request.	Values for various alloys available upon request.

TO ORDER OR SPECIFY, GIVE:

1. Product Code..... CD F-NT
2. Diameter.....D
3. Length L
3. Material .....

MIDWEST FASTENERS, INC
450 Richard St, Miamisburg, OH 45342 | Toll Free: 800-852-8352 | Fax: 937-866-4174 | www.midwestfasteners.com

All information contained herein is subject to change without notice.

SMALL FLANGED—NO THREAD

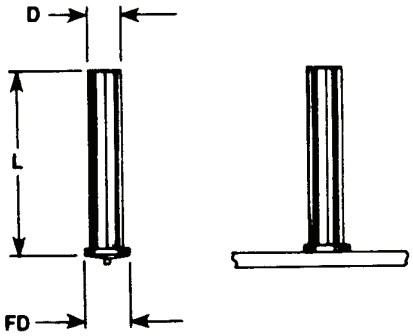

STUD

D		FD	MIN. L
	3/32	.143	.250
.115		.171	.250
	1/8	.156	.250
.141		.195	.250
	5/32	.221	.250
.161		.221	.250
	3/16	.221	.250
.215		.281	.312
	1/4	.281	.312
.273		.343	.375
	5/16	.343	.500

MATERIAL:	**LOW CARBON STEEL** C - 0.23% max. P - 0.04% max. Mn - 0.90% max. S - 0.05% max.	**STAINLESS STEEL** AISI grade - 302/304/305 std. Other grades available upon request.
MECHANICAL PROPERTIES:	Tensile 60,000 psi (min.) Yield 50,000 psi (min.) Elongation 20% (in 2 inches)	Values for various grades available upon request.
PLATING:	Galvanized and Copper plating are available.	Does not apply to Stainless.
ANNEALING:	Studs are annealed where required.	Studs are annealed where required.
MATERIAL:	**ALUMINUM** ALLOY—1100 & 5000 series Other alloys available upon request.	**BRASS** ALLOY—(lead free) 70-30 std. Other alloys available upon request.
MECHANICAL PROPERTIES:	Values for various alloys available upon request.	Values for various alloys available upon request.

TO ORDER OR SPECIFY, GIVE:

1. Product Code.....CD SF-NT
2. Diameter.....D
3. Length L
3. Material .....

450 Richard St, Miamisburg, OH 45342 | Toll Free: 800-852-8352 | Fax: 937-866-4174 | www.midwestfasteners.com

All information contained herein is subject to change without notice.

NON FLANGED— NO THREAD

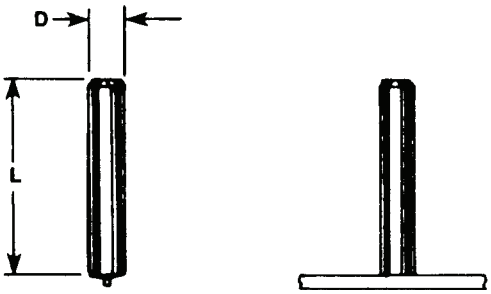

STUD

D		MIN. L
	3/32	.250
.115		.250
	1/8	.250
.141		.250
	5/32	.250
.161		.250
	3/16	.250
.215		.250
	1/4	.375
.276		.375
	5/16	.500

MATERIAL:	**LOW CARBON STEEL** C - 0.23% max. P - 0.04% max. Mn - 0.90% max. S - 0.05% max.	**STAINLESS STEEL** AISI grade - 302/304/305 std. Other grades available upon request.
MECHANICAL PROPERTIES:	Tensile 60,000 psi (min.) Yield 50,000 psi (min.) Elongation 20% (in 2 inches)	Values for various grades available upon request.
PLATING:	Galvanized and Copper plating are available.	Does not apply to Stainless.
ANNEALING:	Studs are annealed where required.	Studs are annealed where required.
MATERIAL:	**ALUMINUM** ALLOY—1100 & 5000 series Other alloys available upon request.	**BRASS** ALLOY—(lead free) 70-30 std. Other alloys available upon request.
MECHANICAL PROPERTIES:	Values for various alloys available upon request.	Values for various alloys available upon request.

TO ORDER OR SPECIFY, GIVE:

1. Product Code ..... CD NF-NT
2. Diameter ..... D
3. Length L
3. Material .....

MIDWEST FASTENERS, INC

450 Richard St, Miamisburg, OH 45342 | Toll Free: 800-852-8352 | Fax: 937-866-4174 | www.midwestfasteners.com

All information contained herein is subject to change without notice.

DRAWN ARC

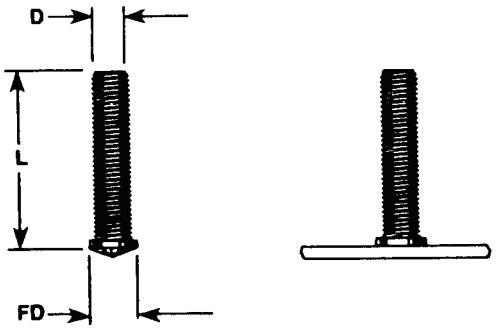

STUD		
D	FD	MIN. L
4-40	.143	.250
6-32	.169	.250
8-32	.195	.250
10-32	.221	.250
10-24	.221	.250
1/4-20	.281	.375

MATERIAL:	**LOW CARBON STEEL** C - 0.23% max. P - 0.04% max. Mn - 0.90% max. S - 0.05% max.	**STAINLESS STEEL** AISI grade - 302/304/305 std. Other grades available upon request.
MECHANICAL PROPERTIES:	Tensile 60,000 psi (min.) Yield 50,000 psi (min.) Elongation 20% (in 2 inches)	Values for various grades available upon request.
PLATING:	Galvanized and Copper plating are available.	Does not apply to Stainless.
ANNEALING:	Studs are annealed where required.	Studs are annealed where required.
MATERIAL:	**ALUMINUM** ALLOY—1100 & 5000 series Other alloys available upon request.	**BRASS** ALLOY—(lead free) 70-30 std. Other alloys available upon request.
MECHANICAL PROPERTIES:	Values for various alloys available upon request.	Values for various alloys available upon request.

TO ORDER OR SPECIFY, GIVE:

1. Product Code.....CD DA
2. Diameter.....D
3. Length L
3. Material .....

450 Richard St, Miamisburg, OH 45342 | Toll Free: 800-852-8352 | Fax: 937-866-4174 | www.midwestfasteners.com

All information contained herein is subject to change without notice.

DRAWN ARC — NO THREAD

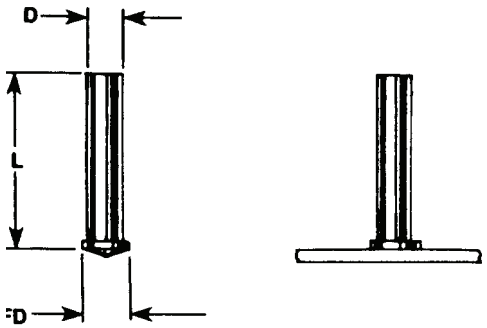

STUD

D		FD	MIN. L
	3/32	.143	.250
.115		.171	.250
	1/8	.156	.250
.141		.195	.250
	5/32	.221	.250
.161		.221	.250
	3/16	.221	.250
.215		.281	.312
	1/4	.218	.312

MATERIAL:	**LOW CARBON STEEL** C - 0.23% max. P - 0.04% max. Mn - 0.90% max. S - 0.05% max.		**STAINLESS STEEL** AISI grade - 302/304/305 std. Other grades available upon request.
MECHANICAL PROPERTIES:	Tensile Yield Elongation	60,000 psi (min.) 50,000 psi (min.) 20% (in 2 inches)	Values for various grades available upon request.
PLATING:	Galvanized and Copper plating are available.		Does not apply to Stainless.
ANNEALING:	Studs are annealed where required.		Studs are annealed where required.
MATERIAL:	**ALUMINUM** ALLOY—1100 & 5000 series Other alloys available upon request.		**BRASS** ALLOY—(lead free) 70-30 std. Other alloys available upon request.
MECHANICAL PROPERTIES:	Values for various alloys available upon request.		Values for various alloys available upon request.

TO ORDER OR SPECIFY, GIVE:

1. Product Code.....CD DA-NT
2. Diameter.....D
3. Length L
3. Material .....

MIDWEST FASTENERS, INC

450 Richard St, Miamisburg, OH 45342 | Toll Free: 800-852-8352 | Fax: 937-866-4174 | www.midwestfasteners.com

All information contained herein is subject to change without notice.

BI-METALLIC STUDS

PIN BI-METALLIC STUD

BMWP

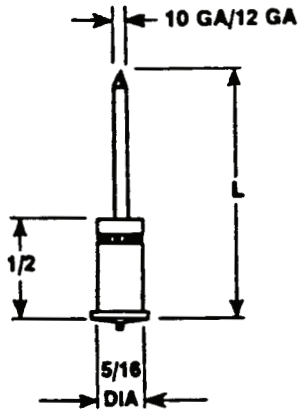

MATERIAL: Pin—10 GA (.135 Dia.) Stainless Steel
12 GA (.105 Dia.) Stainless Steel
Base—Aluminum (5000 Series)

WASHER: Self-locking washers are available in a variety of sizes, shapes and materials.

TO ORDER OR SPECIFY, GIVE:
1. Product Code.....BMWP
2. Length L

ANNULAR RING BI-METALLIC STUD

BMAR

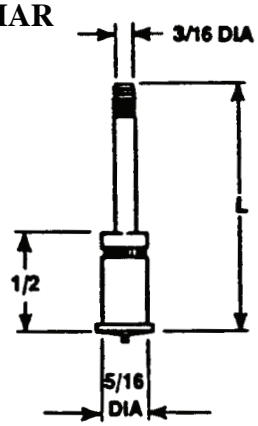

MATERIAL: Pin—Stainless Steel
Base—Aluminum (5000 Series)

CAP: The cap for use with this stud is the WCN AR CAP annular ring cap.

TO ORDER OR SPECIFY, GIVE:
1. Product Code.....BMAR
2. Length L

NOTCHED END BI-METALLIC STUD

BMNE

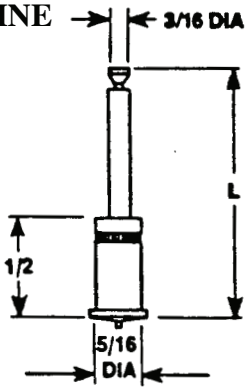

MATERIAL: Pin—Stainless Steel
Base—Aluminum (5000 Series)

WASHER: The washer for use with this stud is the WAK notched end key hole slotted washer.

TO ORDER OR SPECIFY, GIVE:
1. Product Code.....BMNE
2. Length L

FLANGED-ACOUSTICAL HANGER (LAGGING STUD)

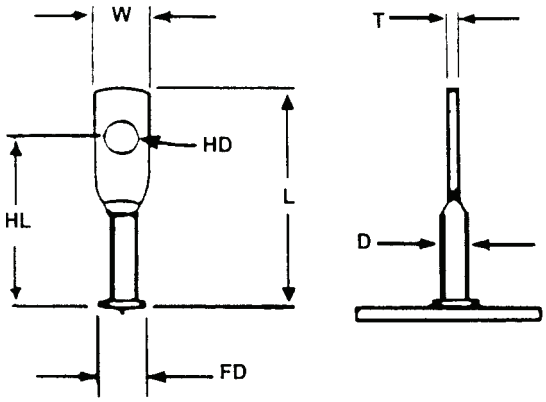

STUD

D	L	FD	HD	HL	W	T
.168	1-1/8	.250	.187	7/8	5/16	1/16
.214	1-1/8	.312	.187	7/8	3/8	5/64

MATERIAL:	**LOW CARBON STEEL** C - 0.23% max. P - 0.04% max. Mn - 0.90% max. S - 0.05% max.	**STAINLESS STEEL** AISI grade - 302/304/305 std. Other grades available upon request.
MECHANICAL PROPERTIES:	Tensile 60,000 psi (min.) Yield 50,000 psi (min.) Elongation 20% (in 2 inches)	Values for various grades available upon request.
PLATING:	Copper plating is standard.	Does not apply to Stainless.
ANNEALING:	Studs are annealed where required.	Studs are annealed where required.
MATERIAL:	**ALUMINUM** ALLOY—1100 & 5000 series Other alloys available upon request.	
MECHANICAL PROPERTIES:	Values for various alloys available upon request.	

TO ORDER OR SPECIFY, GIVE:

1. Product Code.....CD F-AH
2. Diameter.....D
3. Length L
3. Material .....

MIDWEST FASTENERS, INC
450 Richard St, Miamisburg, OH 45342 | Toll Free: 800-852-8352 | Fax: 937-866-4174 | www.midwestfasteners.com

All information contained herein is subject to change without notice.

CD GROUND STUDS

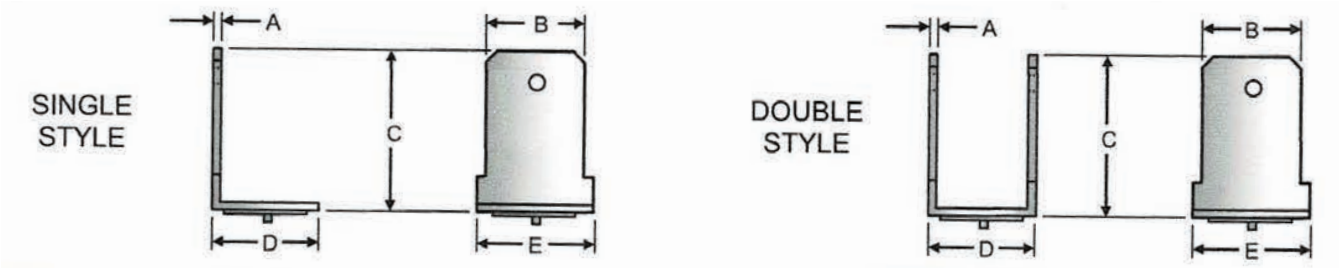

STYLE	MATERIAL	PART NUMBER	A	B	C	D	E
SINGLE	MILD STEEL (copper plate)	081-2931-01	0.032" (0.8mm)	0.250" (6.35mm)	0.460" (11.8mm)	0.375" (9.5mm)	0.320" (8.2mm)
	STAINLESS STEEL	081-2931-05					
	ALUMINUM ALLOY	081-2931-08					
DOUBLE	MILD STEEL (copper plate)	081-2931-04				0.438" (11.1mm)	
	STAINLESS STEEL	081-2931-02					
	ALUMINUM ALLOY	081-2931-09					

MATERIAL	*PLATING*
LOW CARBON STEEL	Copper plating is standard.
STAINLESS STEEL	Does not apply to Stainless.
ALUMINUM	Does not apply to Aluminum.

TO ORDER OR SPECIFY, GIVE:

1. Product Code ..... CD G
2. Style ..... Single (SP), Double (DP)
3. Material .....

MIDWEST FASTENERS, INC

450 Richard St, Miamisburg, OH 45342 | Toll Free: 800-852-8352 | Fax: 937-866-4174 | www.midwestfasteners.com

All information contained herein is subject to change without notice.

SPECIAL CAPACITOR DISCHARGE WELD STUDS

From an .060" diameter no-thread CD stud to a 7/16" hex CD stud, **MIDWEST FASTENERS** can manufacture a special CD stud to meet your precision fastening requirements. The illustrations below indicate just a few of the possible configurations in which CD studs can be manufactured. These illustrations; however, do not represent any standard **MIDWEST FASTENERS** in-stock product line. If you require a special configuration CD stud for your application, please submit a sketch or drawing with dimensions and material requirements to **MIDWEST FASTENERS** for a quote.

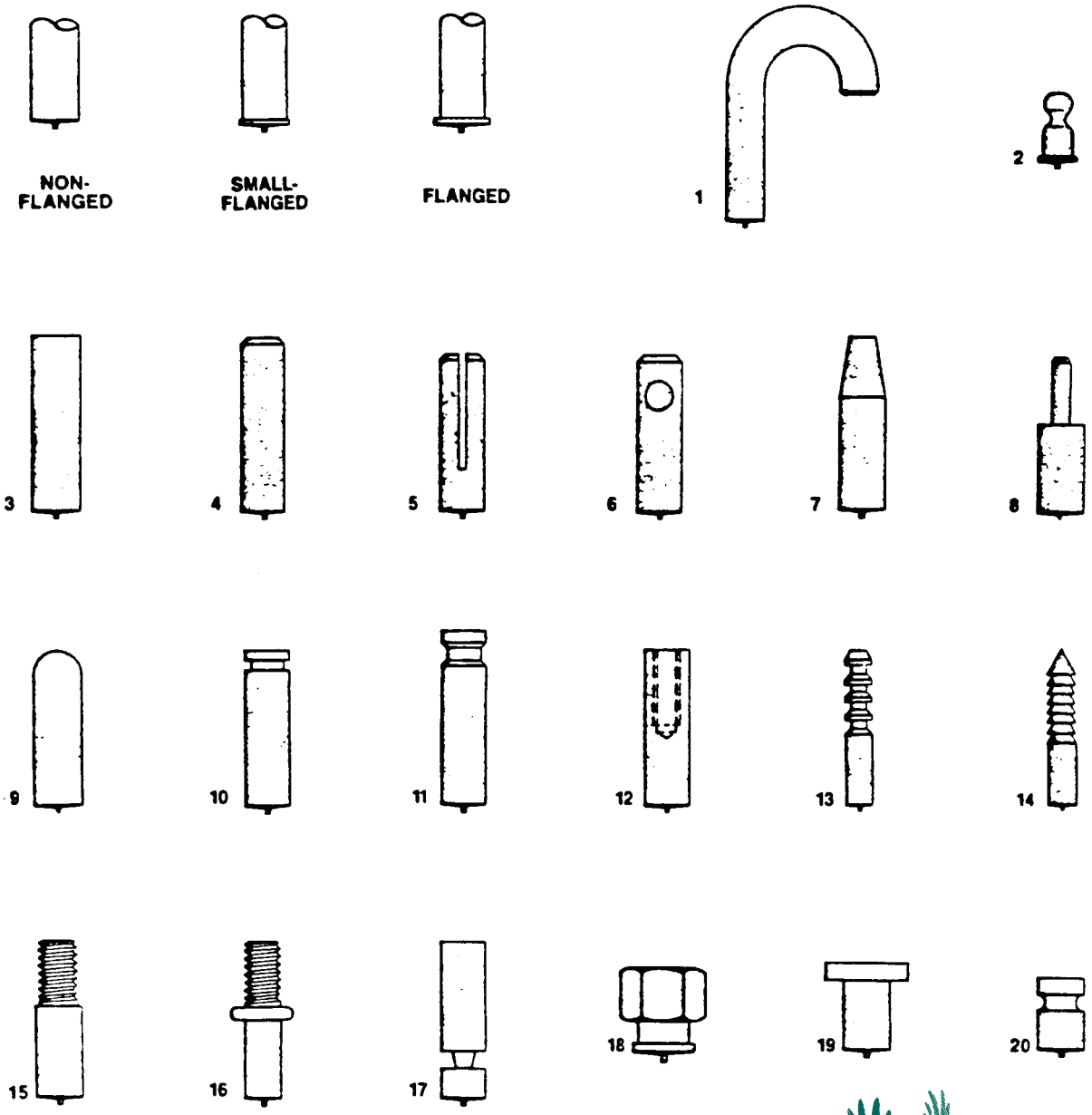

450 Richard St, Miamisburg, OH 45342 | Toll Free: 800-852-8352 | Fax: 937-866-4174 | www.midwestfasteners.com

All information contained herein is subject to change without notice.

SureIIShot

The MIDWEST ultralight pin welder--SureShot II -- welds Cupheads, Weld Pins and Weld Studs up to 5/16" weld base. Featuring Hybrid Power Technology and Dual Operating Power, SureShot II is the most up-to-date Capacitor Discharge pin welder for all applications. Lightweight and rugged, SureShot II has the power to apply virtually any fastener used in the CD Insulation market: with only 110volt (or 220volt) incoming power.
Weight: 18lbs. Dimensions: 13.7" W X 11.6" D X 6" H

EAGLE

MIDWEST Fasteners' basic pin welder, is a solid-state Capacitor Discharge studwelder. Capable of welding Weld Pins and Weld Studs up to 1/4" weld base in Mild Steel, Stainless & Aluminum materials, EAGLE's standard features make it both portable and flexible for all standard applications.
Weight: 26 lbs. Dimensions: 10" W X 13" D X 8-1/2" H

TALON

MIDWEST's standard Cuphead portable, the TALON includes all the features of the EAGLE pin system, plus Cuphead components and capability making this one of the key Insulator machines in the MIDWEST line.
Weight: 29 lbs. Dimensions: 10" W X 13" D X 8-1/2" H

CAPACITOR DISCHARGE STUD WELDER CD80

The mid-line portable from MIDWEST Fasteners, the CD80 targets jobshop users and field insulators where more power is required. With weld capacity up to a 5/16" weld base, the CD80 incorporates higher capacity welding in a Capacitor Discharge 110volt system.
Weight: 56 lbs. Dimensions: 13-1/2" W X 21" D X 9" H

CD700 CAPACITOR DISCHARGE STUD WELDER

One of MIDWEST's heavy-duty portables, the CD700 is a 110volt Capacitor Discharge system capable of all-type Weld Pins, CD Weld Studs, and Cuphead through-Insulation fasteners. With weld base capacity including 3/8" diameter, the CD700 can also weld Power Base pins to rust covered or contaminated surfaces.
Weight: 66 lbs. Dimensions: 13-1/2" W X 21" D X 9" H

CAPACITOR DISCHARGE STUD WELDER CD100

For jobshop or in-the-field use, MIDWEST's CD100 is a heavy-duty portable Capacitor Discharge machine. With weld base capability including 3/8" diameter, the CD100 can affix Weld Studs and Weld Pins (including heavy-duty Power tips) in Mild Steel, Stainless & Aluminum, using only 110volt power.
Weight: 66 lbs. Dimensions: 13-1/2" W X 21" D X 9" H

MIDWEST FASTENERS, INC.
450 Richard St. • Miamisburg, OH 45342
e-mail: sales@midwestfasteners.com
website: www.midwestfasteners.com
Toll Free: 800-852-8352 • Fax: 937-866-4174

MIDWEST FASTENERS, INC.

Phone: 1-800-852-8352 • FAX: 937-866-4174
website: www.midwestfasteners.com

ARC WELD STUDS

SPECIFICATION GUIDE

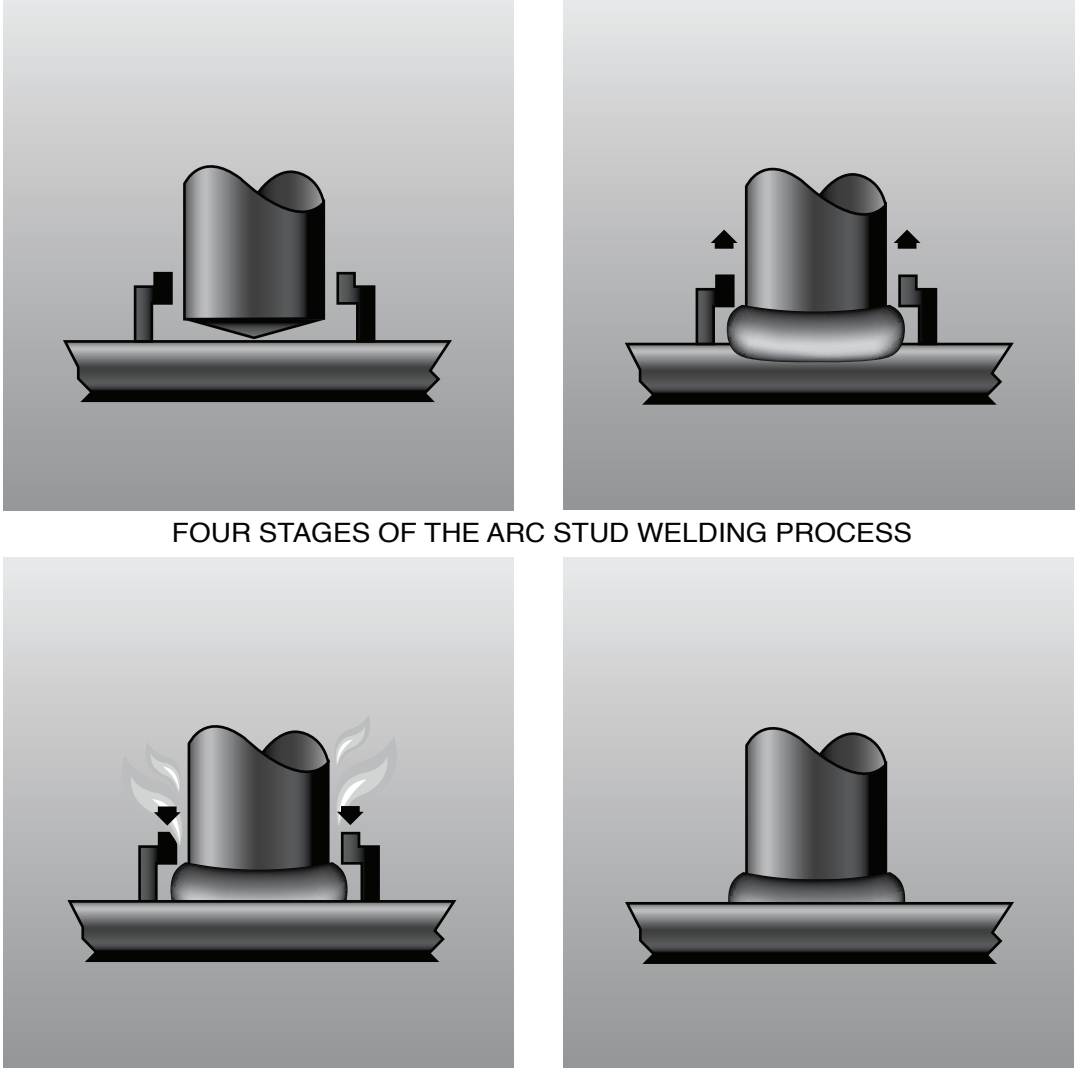

FOUR STAGES OF THE ARC STUD WELDING PROCESS

TABLE OF CONTENTS

ARC STUDS

Arc Stud Welding Process 1
Welded Steel Arc Studs Tensile 2
Torque Strengths 3
Arc Stud Weld Fillet Accommodation 4
Arc Stud Location Template & Bushing Design 5
Arc Stud Weld Inspection 6
Arc Stud Welding Recommendation Minimum Base Metal Thickness 7
Arc Stud Weight Charts 8
Standard Thread 9
Full Thread 10
Full Base 11
Long Reduced Base 12
Short Reduced Base 13
No Thread 14
Bent No Thread 15
Tapped - Full Base 16
Tapped - Reduced Base 17
Shoulder - Threaded 18
Shoulder - Annular Groove 19
Shoulder - No Thread 20
Collar 21
Bent Collar 22
Annular Ring (Navy) 23
Rectangular - Plain 24
Rectangular - “T” Slotted 25
Rectangular - With Hole 26
Knurled 27
Headed Concrete Anchor 28
Shear Connector 29

MIDWEST FASTENERS, INC

450 Richard St, Miamisburg, OH 45342 | Toll Free: 800-852-8352 | Fax: 937-866-4174 | www.midwestfasteners.com

All information contained herein is subject to change without notice.

THE ARC STUD WELDING PROCESS

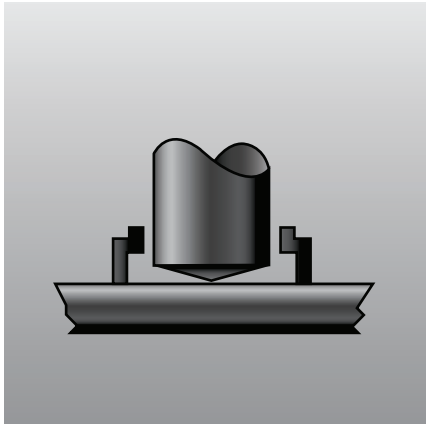

1. STUD AND CERAMIC FERRULE AGAINST THE WORK PLATE

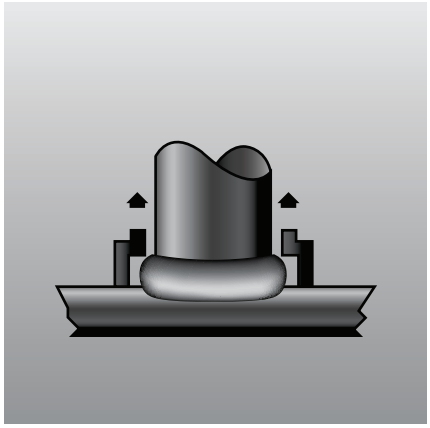

2. STUD LIFTS AND ARC IS DRAWN

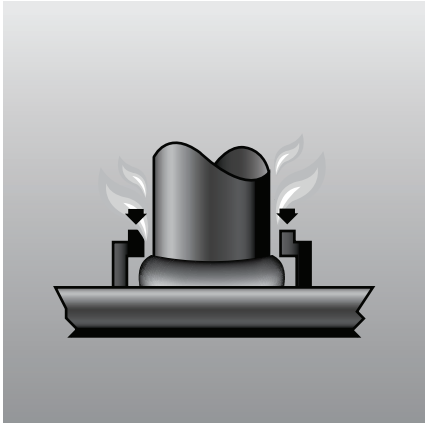

3. CONTROL TIMES OUT AND STUD PLUNGES INTO MOLTEN STEEL

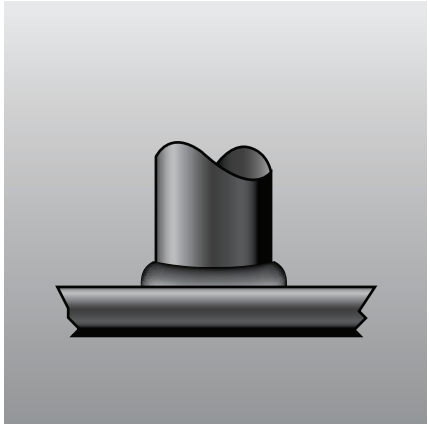

4. METAL SOLIDIFIES AND WELD IS COMPLETED IN MILLISECONDS

ARC Stud Welding involves the same basic principles and metallurgical aspects as any other arc welding procedure. The weld gun lifts the stud a short distance from the base metal and initiates a controlled electric arc from the power source which melts the end of the stud and a portion of the base metal. The ceramic ferrule contains the molten metal into which the stud is thrust automatically and a high quality fusion weld is accomplished.

ARC Stud Welding is generally used to weld larger diameter studs to thick base metals. ARC studs may be almost any shape and there are literally hundreds; however, they must have one end of the stud designed for ARC welding and must be made of weldable materials. Mild steel, stainless steel, and aluminum are applicable materials for ARC stud welding.

Contact MIDWEST FASTENERS Customer Service Department for technical assistance in non-standard arc stud fastener design.

450 Richard St, Miamisburg, OH 45342 | Toll Free: 800-852-8352 | Fax: 937-866-4174 | www.midwestfasteners.com

All information contained herein is subject to change without notice.

MIDWEST FASTENERS, INC.
WELDED STEEL ARC STUDS
TENSILE & TORQUE STRENGTHS

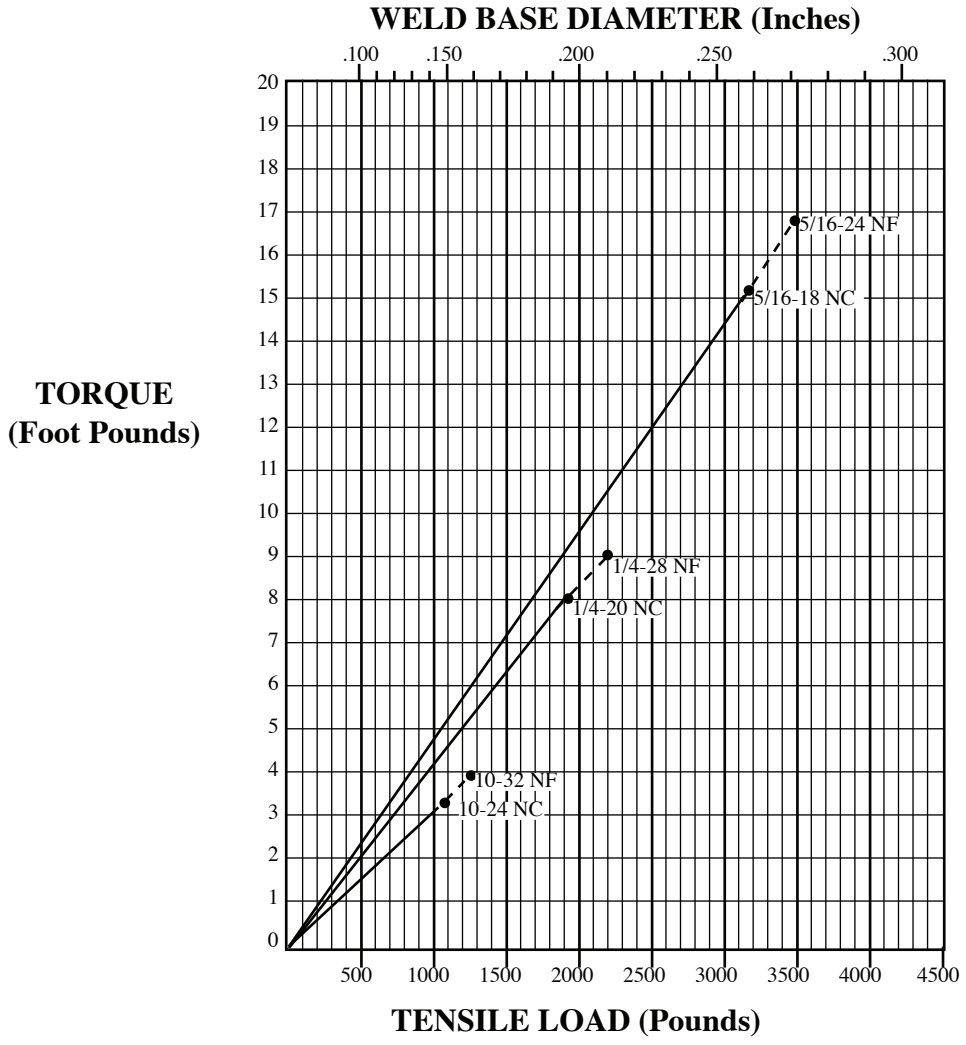

Graphs are based on 60,000 psi strength steel.

Of course, in actual practice, a stud should never be used at its yield load. A factor of safety must be applied. It is generally recommended that studs be used at no more than 60% of yield. However, the factor of safety may vary up or down, depending of the particular application. The user will make this determination. If further assistance is needed, contact MIDWEST FASTENERS Customer Service Department.

Scale along the top of each graph represents weld base diameter in inches, while the one at the graph's bottom edge shows tensile load in pounds. A separate line is plotted for each thread diameter. The solid portion of each line terminates at a small dot which represents the tensile yield of the national course thread. A dashed line is then extended to a second dot at the tensile yield load of the national fine thread.

450 Richard St, Miamisburg, OH 45342 | Toll Free: 800-852-8352 | Fax: 937-866-4174 | www.midwestfasteners.com

All information contained herein is subject to change without notice.

MIDWEST FASTENERS, INC.
WELDED STEEL ARC STUDS
TENSILE & TORQUE STRENGTHS

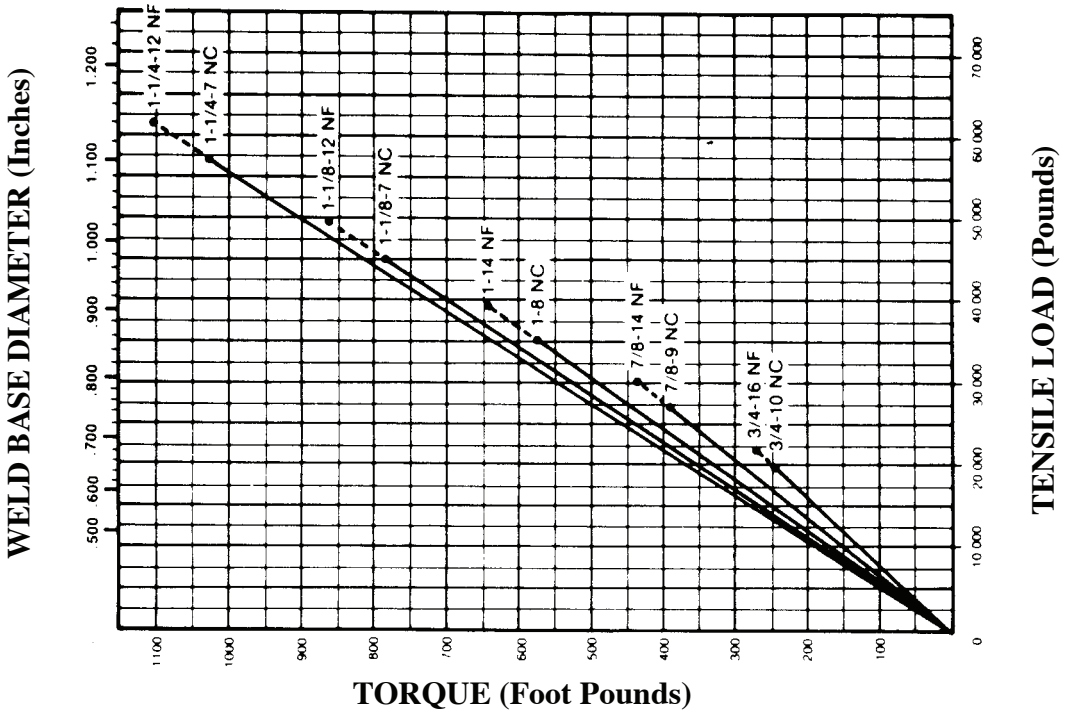

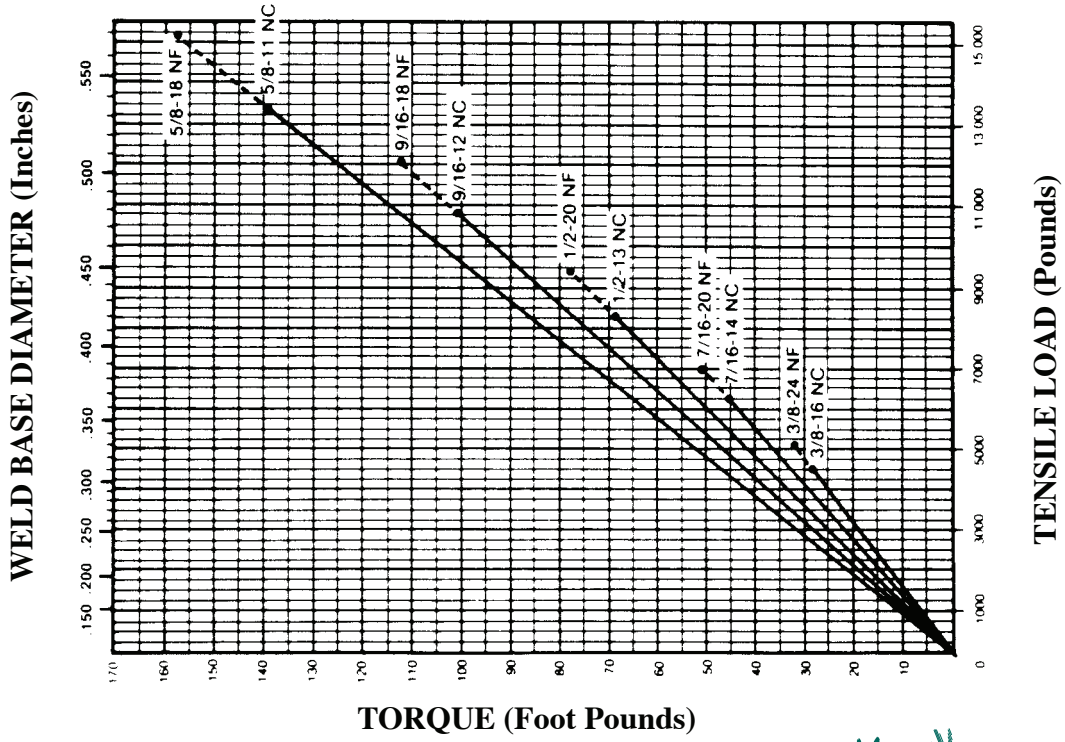

450 Richard St, Miamisburg, OH 45342 | Toll Free: 800-852-8352 | Fax: 937-866-4174 | www.midwestfasteners.com

All information contained herein is subject to change without notice.

ARC STUD WELD FILLET ACCOMMODATION

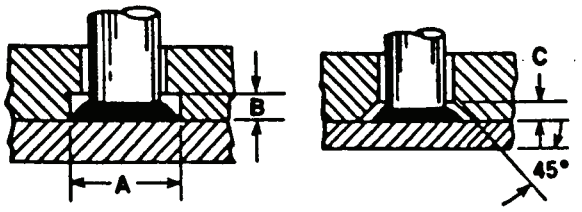

STUD SIZE (in.)	COUNTERBORE (in.) A	B	90° COUNTERSINK (in.) C
1/4	0.437	0.125	0.125
5/16	0.500	0.125	0.125
3/8	0.593	0.125	0.125
7/16	0.656	0.187	0.125
1/2	0.750	0.187	0.187
5/8	0.875	0.218	0.187
3/4	1.125	0.312	0.187

COUNTER BORE OR COUNTER SINK METHODS

When an arc stud is welded, a fillet forms around its base with the fillet dimensions being closely controlled by the design of the ferrule used. Since the diameter of the fillet is generally larger than the diameter of the stud, some consideration is required in the design of mating parts. MIDWEST FASTENERS recommends a counter bore and counter sink method for this application. Dimensions will vary with studs and ferrules. Additional methods of accommodating fillet include over-sized clearance holes, use of a gasket material around the fillet or use of a dog type construction.

SEVERAL OPTIONAL METHODS OF FILLET ACCOMMODATION:

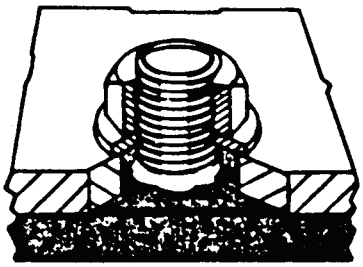

(A) OVERSIZE CLEARANCE HOLE

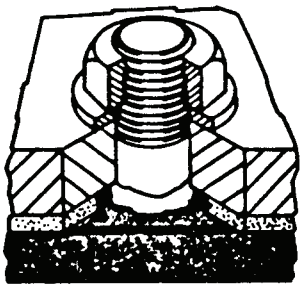

(B) GASKET MATERIAL

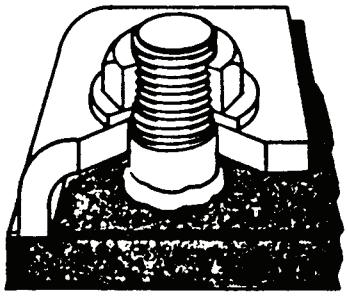

(C) DOG CLAMP

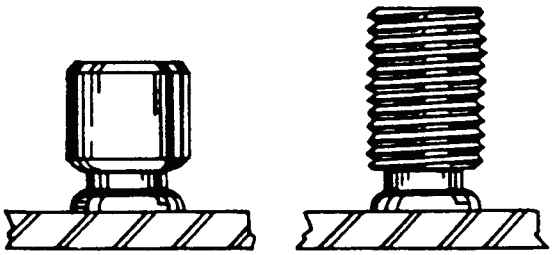

IF AN OVERSIZE FILLET DOES NOT MEET THE APPLICATION:

A MIDWEST FASTENERS weld stud designed with a reduced weld base is available so that the weld fillet does not exceed the maximum diameter of fastener. This design is not recommended if full fastener strength is important.

MIDWEST FASTENERS, INC

450 Richard St, Miamisburg, OH 45342 | Toll Free: 800-852-8352 | Fax: 937-866-4174 | www.midwestfasteners.com

All information contained herein is subject to change without notice.

ARC STUD LOCATION TEMPLATE & BUSHING DESIGN

TEMPLATE METHOD

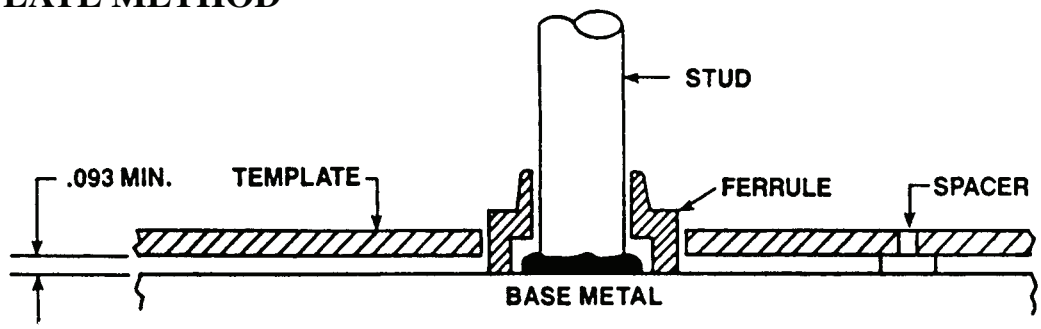

This method of templating is recommended by MIDWEST FASTENERS for use with ferrules. The template is usually a steel plate 3/32" to 3/16" thick. Spacers are required to allow the gases to escape during the welding cycle. The ferrule can be held by a standard ferrule grip or where clearance is prohibitive a tube type set-up can be used. The recommended hole sizes on the template to locate the ferrules should equal the maximum outside diameter of the ferrule plus 1/32". Holes may be drilled or bored at required locations. See stud specification sheets for ferrule details. For further assistance contact the MIDWEST FASTENERS Customer Service Department.

BUSHING METHOD

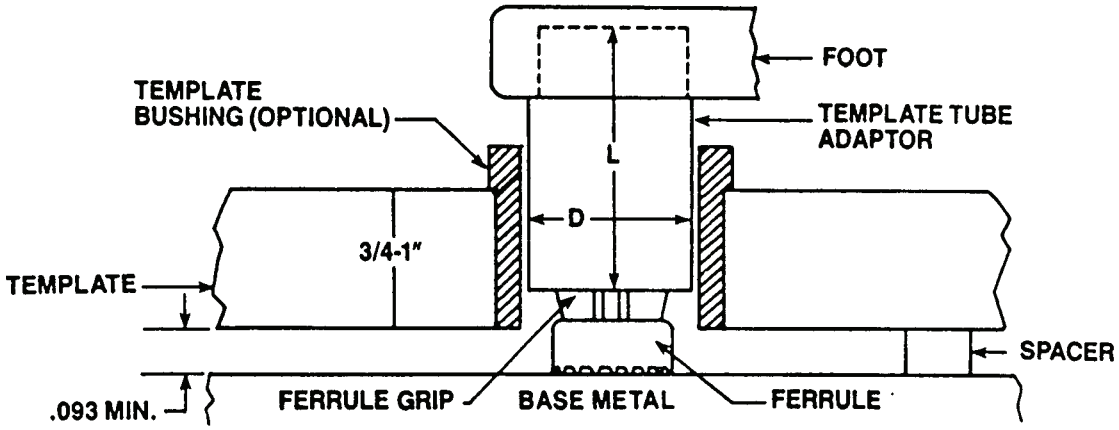

This method of templating is recommended by MIDWEST FASTENERS for use with all arc stud styles. The design makes it possible to accurately hold angular alignment of the studs as well as stud location. The template should be made of ebonite or masonite of a thickness sufficient to afford good alignment. Template bushings may be used to insure greater accuracy and extend the life of the template. Standard ferrule grips are used with the tube adapter. This permits standardization of templates since it is only necessary to change the ferrule grip to weld studs of different diameters. The hole diameter of the bushing or template should be approximately .010 larger than the maximum outside diameter of the template tube adapter.

STUD Size	D	L
1/2" and under	1.250	2.000
5/8" and 3/4"	1.562	2.500
7/8" and larger	2.125	2.500

ARC STUD LOCATION TEMPLATE & BUSHING DESIGN

ARC STUD WELD INSPECTION (VISUAL)

The MIDWEST FASTENERS ARC stud weld can be visually inspected by observing the fillet at the base of the stud. The illustrations and comments below will assist you in visually judging the quality of the weld.

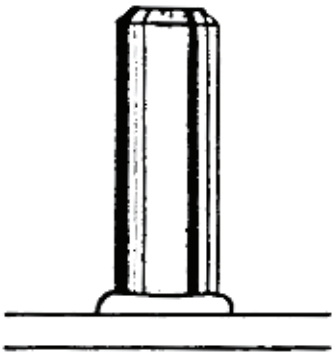

GOOD WELD
Full, even, shiny fillet all around stud.

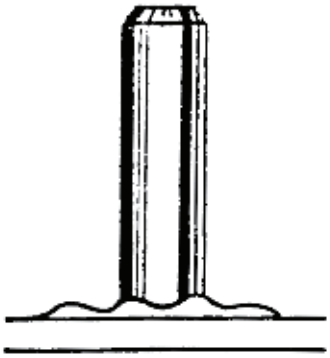

HOT WELD
Very shiny, low profile fillet extending beyond outside of ferrule.

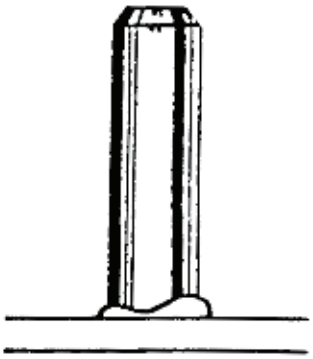

COLD WELD
Small, uneven, dull appearing fillet with fingers of metal extending through vents of ferrule.

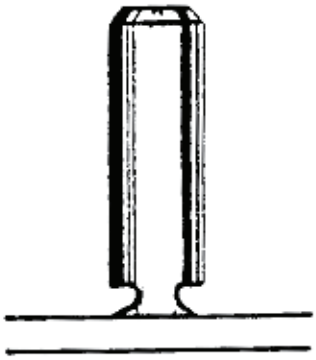

SHORT PLUNGE OR HANG-UP
No fillet, no stud burn-off, or undercut base.

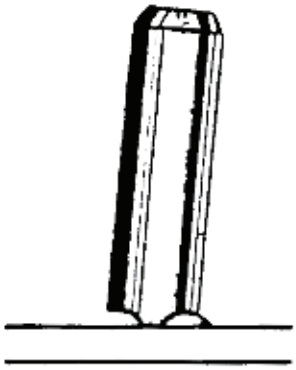

MISALIGNMENT
Partial or no fillet, undercut, stud not perpendicular to base metal.

MIDWEST FASTENERS, INC
450 Richard St, Miamisburg, OH 45342 | Toll Free: 800-852-8352 | Fax: 937-866-4174 | www.midwestfasteners.com

All information contained herein is subject to change without notice.

ARC STUD WELDING RECOMMENDED MINIMUM BASE METAL THICKNESS

STUD WELD BASE DIA. (in.)	STEEL		ALUMINUM	
	WITHOUT BACKUP (in.)	WITHOUT BACKUP (gage)	WITHOUT BACKUP (in.)	WITH BACKUP (in.)
0.187	0.0359	20	0.125	0.125
0.250	0.0478	18	0.125	0.125
0.312	0.0598	16	0.187	0.125
0.375	0.0747	14	0.187	0.187
0.437	0.0897	13	0.250	0.187
0.500	0.1196	11	0.250	0.250
0.625	0.148	9		
0.750	0.187			
0.875	0.250			
1.000	0.375			

ARC STUD WELDING DC POWER SUPPLY REQUIREMENTS

POWER SUPPLY (NEMA RATED)	STUD WELD BASE DIAMETER IN INCHES

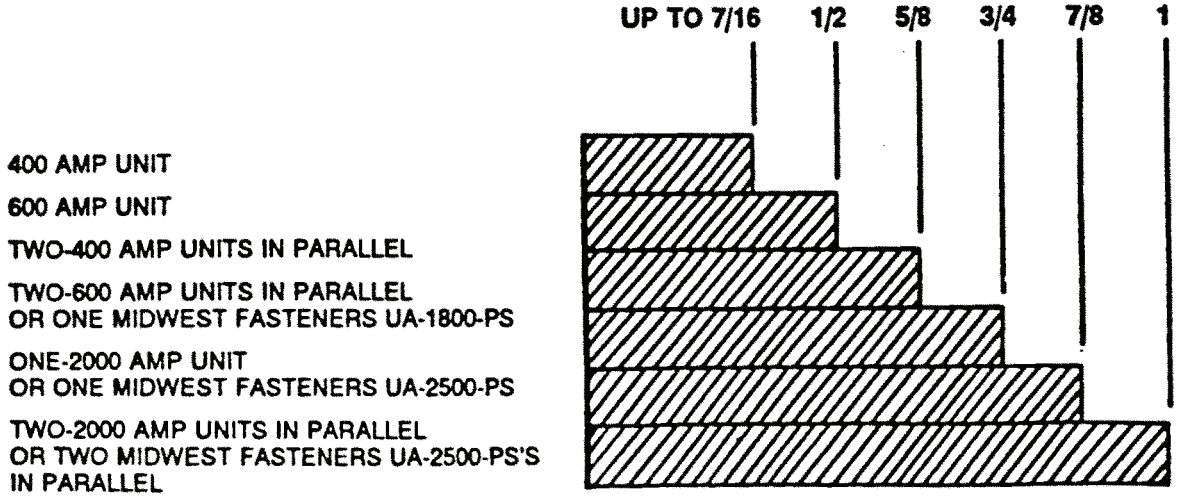

ARC STUDS WEIGHT CHARTS (STEEL)

MIDWEST FASTENERS ESTIMATED WEIGHTS OF THREADED STUDS IN POUNDS PER 1000 PIECES								
LENGTH	1/4-20	5/16-18	3/8-16	7/16-14	1/2-13	5/8-11	3/4-10	7/8-9
3/4	8.3	12.8	18.8	25.5	34.5			
1	11.0	17.0	25.0	34.0	46.0	70.0		
1-1/4	13.8	21.3	31.3	42.5	57.5	87.5	133.8	
1-1/2	16.5	25.5	37.5	51.0	69.0	105.0	160.5	243.8
1-3/4	19.3	29.8	43.8	59.5	80.5	122.5	187.3	284.4
2	22.0	34.0	50.0	68.0	92.0	140.0	214.0	325.0
2-1/4	24.8	38.3	56.3	76.5	103.5	157.5	240.8	165.6
2-1/2	27.5	42.5	62.5	85.0	115.0	175.0	267.5	406.3
2-3/4	30.3	46.8	68.8	93.5	126.5	192.5	294.3	446.9
3	33.0	51.0	75.0	102.0	138.0	210.0	321.0	487.5
3-1/4	35.8	55.3	81.3	110.5	149.5	227.5	347.8	528.1
3-1/2	38.5	59.5	87.5	119.0	161.0	245.0	374.5	568.8
3-3/4	41.3	63.8	93.8	127.5	172.5	262.5	401.3	609.4
4	44.0	68.0	100.0	136.0	184.0	280.0	428.0	650.0
4-1/4	46.8	72.3	106.3	144.5	195.5	297.5	454.8	690.6
4-1/2	49.5	76.5	112.5	153.0	207.0	315.0	481.5	731.3
4-3/4	52.3	80.8	118.8	161.5	218.5	332.5	508.3	771.9
5	55.0	85.0	125.0	170.0	230.0	350.0	535.0	812.5
EACH ADD'L. INCH	11.0	17.0	25.0	34.0	46.0	70.0	107.0	162.5
"P" FERRULE	1.8	2.8	3.1	4.5	5.9	10.8	21.9	39.0

MIDWEST FASTENERS ESTIMATED WEIGHTS OF NO-THREAD STUDS IN POUNDS PER 1000 PIECES									
LENGTH	3/16 dia.	1/4 dia.	5/16 dia.	3/8 dia.	7/16 dia.	1/2 dia.	5/8 dia.	3/4 dia.	7/8 dia.
3/4	6.0	10.5	16.4	23.5	31.9	41.7			
1	8.0	14.0	21.8	31.3	42.5	55.6	86.6		
1-1/4	10.0	17.5	27.3	39.1	53.1	69.5	108.3	156.0	
1-1/2	12.0	21.0	32.7	47.0	63.8	83.4	129.9	187.2	225.0
1-3/4	14.0	24.5	38.2	54.8	74.4	97.3	151.6	218.4	297.5
2	16.0	28.0	43.6	62.6	85.0	111.2	173.2	249.6	340.0
2-1/4	18.0	31.5	49.1	70.4	95.6	125.1	194.9	280.8	382.5
2-1/2	20.0	35.0	54.5	78.3	106.3	139.0	216.5	312.0	425.0
2-3/4	22.0	38.5	60.0	86.1	116.9	152.9	238.2	343.2	467.5
3	24.0	42.0	65.4	93.9	127.5	166.8	259.8	374.4	510.0
3-1/4	26.0	45.5	70.9	101.7	138.1	180.7	281.5	405.6	552.5
3-1/2	28.0	49.0	76.3	117.4	148.8	194.6	303.1	436.8	595.0
3-3/4	30.0	52.5	81.8	125.2	159.4	208.5	324.8	468.0	637.5
4	32.0	56.0	87.2	125.2	170.0	222.4	346.4	499.2	680.0
4-1/4	34.0	59.5	92.7	133.0	180.6	236.3	368.1	530.4	722.5
4-1/2	36.0	63.0	98.1	140.9	191.3	250.2	389.7	561.6	765.0
4-3/4	38.0	66.5	103.6	148.7	201.9	264.1	411.4	592.8	807.5
5	40.0	70.0	109.0	156.5	212.5	278.0	433.0	624.0	850.0
EACH ADD'L. IN.	8.0	14.0	21.8	31.3	42.5	55.6	86.6	124.8	170.0
"F" FERRULE	2.0	2.9	4.3	5.0	5.2	7.4	15.5	30.1	49.0

MIDWEST FASTENERS, INC

450 Richard St, Miamisburg, OH 45342 | Toll Free: 800-852-8352 | Fax: 937-866-4174 | www.midwestfasteners.com

All information contained herein is subject to change without notice.

STANDARD THREAD

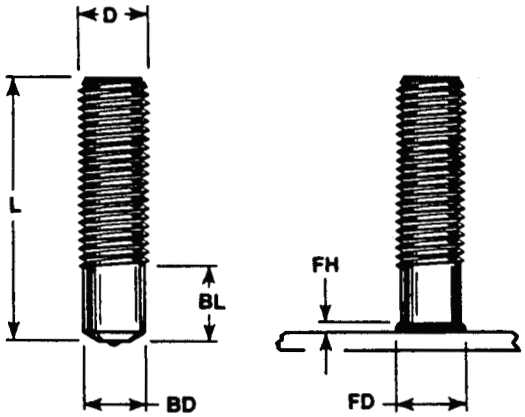

STUD

D	MIN. L	BD	MIN. BL	FD	FH	FERRULE CODE
1/4	3/4	.215	.375	.312	.093	P250
5/16	3/4	.275	.375	.406	.109	P312
3/8	3/4	.330	.390	.468	.109	P375
7/16	3/4	.387	.437	.531	.125	P347
1/2	7/8	.446	.500	.593	.156	P500
5/8	1	.562	.625	.750	.187	P625
3/4	1-1/4	.680	.796	.920	.250	P750
7/8	1-3/8	.798	.859	1.046	.312	P875
1"	1-1/2	.913	.921	1.187	.375	P1000

THREADS: Standard thread is UNC-2A (Rolled when possible), other threads are available upon request. Maximum standard thread length is 3-7/8".

MATERIAL:

LOW CARBON STEEL

C - 0.23% max. P - 0.04% max.
Mn - 0.90% max. S - 0.05% max.

STAINLESS STEEL

AISI grade - 302/304/305 std.
Other grades available upon request.

MECHANICAL PROPERTIES:

Tensile	60,000 psi (min.)
Yield	50,000 psi (min.)
Elongation	20% (in 2 inches)

Values for various grades available upon request.

PLATING: Plating is not standard. Copper, nickel, and zinc available upon customer request.

Does not apply to Stainless.

FERRULES: Ferrules are component parts of studs. Not sold separately.

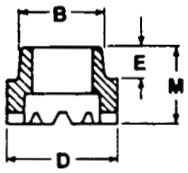

FERRULE

CODE	B	D	E	M	PART NO.
P250	.380	.455	.125	.250	092 0008 06
P312	.445	.535	.125	.250	092 0008 07
P375	.505	.595	.125	.265	092 0008 08
P437	.585	.675	.156	.329	092 0008 09
P500	.650	.740	.156	.362	092 0008 10
P625	.785	.906	.156	.433	092 0008 11
P750	1.030	1.150	.187	.526	092 0008 12
P875	1.203	1.330	.187	.593	092 0008 13
P1000	1.406	1.500	.187	.593	092 0008 14

TO ORDER OR SPECIFY, GIVE:

1. Product Code.....ARC ST
2. Diameter.....D
3. Length L
4. Material .....

450 Richard St, Miamisburg, OH 45342 | Toll Free: 800-852-8352 | Fax: 937-866-4174 | www.midwestfasteners.com

All information contained herein is subject to change without notice.

FULL THREAD

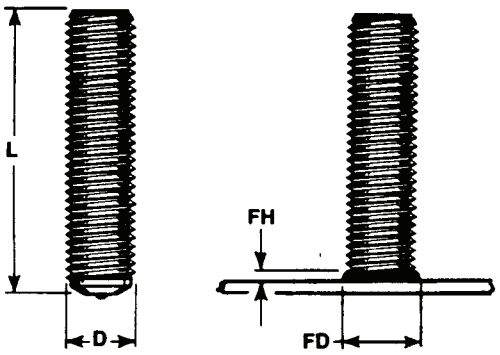

STUD

D	MIN.** L	FD	FH	FERRULE CODE
#10	3/4*	.281	.093	F187
1/4	3/4*	.359	.109	F250
5/16	3/4*	.437	.109	F312
3/8	3/4*	.500	.125	F375
7/16	7/8	.578	.140	F437
1/2	7/8	.625	.156	F500
5/8	1-1/8	.796	.187	F625
3/4	1-1/8	.937	.250	F750
7/8	1-1/2	1.093	.312	F875

* Ferrules used with studs 3/4" long are special "short F" ferrules.
**KNOCK-OFF studs are available if shorter lengths are required.

THREADS: Standard thread is UNC-2A (Rolled when possible), other threads are available upon request. Maximum standard thread length is 3-7/8".

MATERIAL:

LOW CARBON STEEL
C - 0.23% max. P - 0.04% max.
Mn - 0.90% max. S - 0.05% max.

STAINLESS STEEL
AISI grade - 302/304/305 std.
Other grades available upon request.

MECHANICAL PROPERTIES:

Tensile	60,000 psi (min.)
Yield	50,000 psi (min.)
Elongation	20% (in 2 inches)

Values for various grades available upon request.

PLATING: Plating is not standard. Copper, nickel, and zinc available upon customer request.

Does not apply to Stainless.

FERRULES: Ferrules are component parts of studs. Not sold separately.

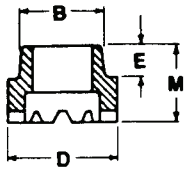

FERRULE

CODE	B	D	E	M	PART NO.
F187	.305	.390	.156	.390	092 0005 05
F250	.380	.455	.156	.390	092 0005 06
F312	.445	.578	.156	.265	092 0005 07
F375	.505	.640	.156	.329	092 0005 08
F437	.585	.703	.188	.362	092 0005 09
F500	.650	.795	.188	.433	092 0005 10
F625	.785	1.030	.188	.526	092 0005 11
F750	1.030	1.218	.188	.593	092 0005 12
F875	1.203	1.406	.188	.732	092 0005 13

TO ORDER OR SPECIFY, GIVE:

1. Product Code.....ARC FT
2. Diameter.....D
3. Length.....L
4. Material.....

MIDWEST FASTENERS, INC
450 Richard St, Miamisburg, OH 45342 | Toll Free: 800-852-8352 | Fax: 937-866-4174 | www.midwestfasteners.com

All information contained herein is subject to change without notice.

FULL BASE

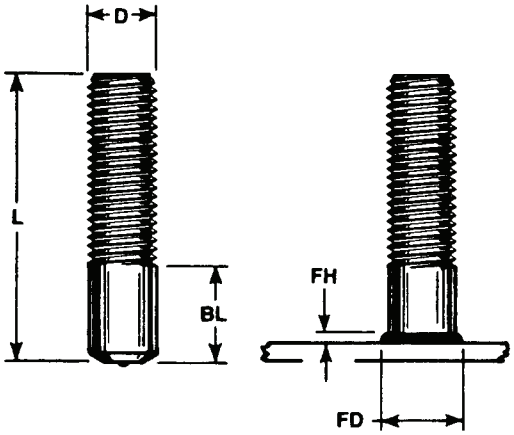

STUD

D	MIN. L	MIN. BL	MAX. FD	MAX. FH	FERRULE CODE
1/4	3/4*	.375	.335		F250
5/16	7/8	.375	.406	.125	F312
3/8		.500	.468	.141	F375
7/16	1-1/8	.500	.546	.156	F437
1/2	1-1/4	.500	.609	.172	F500
5/8	1-1/2	.500	.765	.266	F625
3/4	1-3/4	.675	.906	.335	F750
7/8	2-1/2	.750	1.046	.390	F875
1	2-1/2	1.000	1.203	.468	F1000

THREADS: Standard thread is UNC-2A (Rolled when possible), other threads are available upon request. Maximum standard thread length is 3-7/8".

	LOW CARBON STEEL		STAINLESS STEEL
MATERIAL:	C - 0.23% max.	P - 0.04% max.	AISI grade - 302/304/305 std.
	Mn - 0.90% max.	S - 0.05% max.	Other grades available upon request.
MECHANICAL PROPERTIES:	Tensile	60,000 psi (min.)	Values for various grades available upon request.
	Yield	50,000 psi (min.)	
	Elongation	20% (in 2 inches)	
PLATING:	Plating is not standard. Copper, nickel, and zinc available upon customer request.		Does not apply to Stainless.

FERRULES: Ferrules are component parts of studs. Not sold separately.

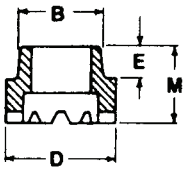

FERRULE

CODE	B	D	E	M	PART NO.
F250	.380	.455	.125	.390	092 0005 06
F312	.445	.578	.156	.390	092 0005 07
F375	.505	.640	.156	.390	092 0005 08
F437	.585	.703	.188	.422	092 0005 09
F500	.650	.795	.188	.438	092 0005 10
F625	.785	1.030	.188	.516	092 0005 11
F750	1.030	1.218	.188	.681	092 0005 12
F875	1.203	1.406	.194	.734	092 0005 13
F1000	1.406	1.609	.1250	.843	092 0005 14

TO ORDER OR SPECIFY, GIVE:

1. Product Code.....ARC FB
2. Diameter.....D
3. Length L
4. Material .....

450 Richard St, Miamisburg, OH 45342 | Toll Free: 800-852-8352 | Fax: 937-866-4174 | www.midwestfasteners.com

All information contained herein is subject to change without notice.

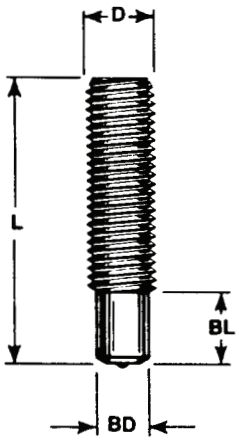

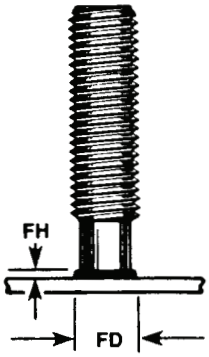

LONG REDUCED BASE

STUD

D	MIN. L	BD	MIN. BL	FD	FH	FERRULE CODE
1/4	3/4	.187	.375	.281	.109	FS187
5/16	3/4	.250	.375	.359	.125	FS250
3/8	3/4	.312	.375	.437	.125	FS312
7/16	1	.375	.375	.500	.140	FS375
1/2	1	.437	.437	.578	.140	FS437
5/8	1-1/4	.500	.500	.656	.156	FS500
3/4	1-1/2	.625	.718			FS625

THREADS: Standard thread is UNC-2A (Rolled when possible), other threads are available upon request. Maximum standard thread length is 3-7/8".

MATERIAL:

LOW CARBON STEEL

C - 0.23% max. P - 0.04% max.
Mn - 0.90% max. S - 0.05% max.

STAINLESS STEEL

AISI grade - 302/304/305 std.
Other grades available upon request.

MECHANICAL PROPERTIES:

Tensile	60,000 psi (min.)
Yield	50,000 psi (min.)
Elongation	20% (in 2 inches)

Values for various grades available upon request.

PLATING: Plating is not standard. Copper, nickel, and zinc available upon customer request.

Does not apply to Stainless.

FERRULES: Ferrules are component parts of studs. Not sold separately.

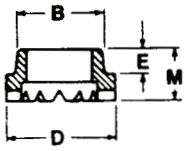

FERRULE

CODE	B	D	E	M	PART NO.
FS187	.305	.390	.125	.250	092 0004 05
FS250	.380	.455	.125	.250	092 0004 06
FS312	.505	.595	.125	.250	092 0004 07
FS375	.585	.675	.125	.250	092 0004 08
FS437	.650	.740	.156	.281	092 0004 09
FS500	.785	.875	.156	.281	092 0004 10
FS625	.921	1.030	.187	.375	092 0004 11

O ORDER OR SPECIFY, GIVE:

1. Product Code.....ARC LRB
2. Diameter.....D
3. Length L
4. Material .....

MIDWEST FASTENERS, INC
450 Richard St, Miamisburg, OH 45342 | Toll Free: 800-852-8352 | Fax: 937-866-4174 | www.midwestfasteners.com

All information contained herein is subject to change without notice.

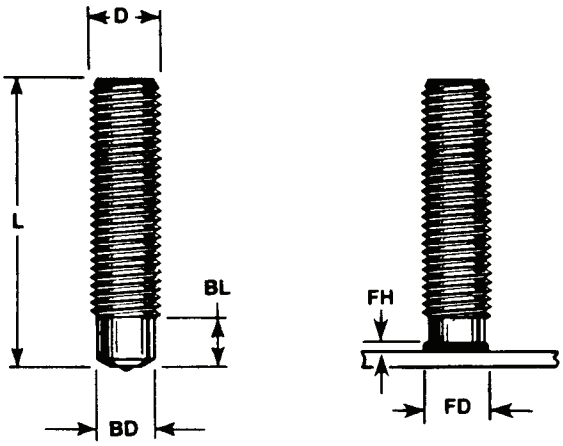

SHORT REDUCED BASE

STUD						
D	MIN · L	BD	MIN · BL	FD	FH	FERRULE CODE
1/4	7/8	.187	.156	.281	.109	TB250
5/16	7/8	.275	.250	.390	.109	RB312
3/8	7/8	.312	.250	.437	.125	RB375
1/2	1	.435	.250	.593	.156	RB500
5/8	1-1/8	.500	.312	.687	.156	TB625
3/4	1-1/8	.625	.375	.812	.187	TB750

THREADS: Standard thread is UNC-2A (Rolled when possible), other threads are available upon request. Maximum standard thread length is 3-7/8".

	LOW CARBON STEEL		STAINLESS STEEL
MATERIAL:	C - 0.23% max.	P - 0.04% max.	AISI grade - 302/304/305 std.
	Mn - 0.90% max.	S - 0.05% max.	Other grades available upon request.
MECHANICAL PROPERTIES:			
	Tensile	60,000 psi (min.)	Values for various grades available upon request.
	Yield	50,000 psi (min.)	
	Elongation	20% (in 2 inches)	
PLATING:	Plating is not standard. Copper, nickel, and zinc available upon customer request.		Does not apply to Stainless.

FERRULES: Ferrules are component parts of studs. Not sold separately.

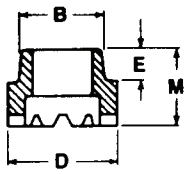

FERRULE					
CODE	B	D	E	M	PART NO.
TB250	.380	.455	.156	.375	092 0012 06
RB312	.445	.546	.156	.437	092 0012 07
RB375	.505	.640	.156	.437	092 0012 08
RB500	.650	.796	.187	.468	092 0012 10
TB625	.785	1.030	.187	.578	092 0012 11
TB750	.921	1.140	.203	.593	092 0012 12

TO ORDER OR SPECIFY, GIVE:

1. Product Code.....ARC SRB
2. Diameter.....D
3. Length L
4. Material .....

450 Richard St, Miamisburg, OH 45342 | Toll Free: 800-852-8352 | Fax: 937-866-4174 | www.midwestfasteners.com

All information contained herein is subject to change without notice.

NO THREAD

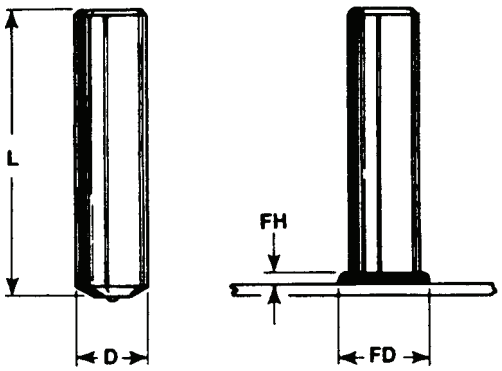

STUD

D	MIN** L	FD	FH	FERRULE CODE
3/16	3/4*	.281	.093	F187
1/4	3/4*	.359	.109	F250
5/16	3/4*	.437	.109	F312
3/8	3/4*	.500	.125	F375
7/16	3/4*	.578	.140	F437
1/2	7/8	.627	.156	F500
5/8	1″	.796	.187	F625
3/4	1-1/8	.937	.250	F750
7/8	1-1/4	1.093	.312	F875
1″	1-1/2	1.312	.375	F1000

* Ferrules used with studs 3/4" long are special "short F" ferrules.
** KNOCK-OFF studs are available if shorter lengths are required.

	LOW CARBON STEEL		STAINLESS STEEL
MATERIAL:	C - 0.23% max.	P - 0.04% max.	AISI grade - 302/304/305 std.
	Mn - 0.90% max.	S - 0.05% max.	Other grades available upon request.
MECHANICAL PROPERTIES:	Tensile	60,000 psi (min.)	Values for various grades available upon request.
	Yield	50,000 psi (min.)	
	Elongation	20% (in 2 inches)	
PLATING:	Plating is not standard. Copper, nickel, and zinc available upon customer request.		Does not apply to Stainless.

FERRULES: Ferrules are component parts of studs. Not sold separately.

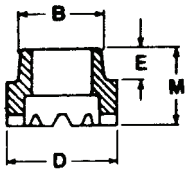

FERRULE

CODE	B	D	E	M	PART NO.
F187	.305	.390	.156	.390	092 0005 05
F250	.380	.455	.156	.390	092 0005 06
F312	.445	.578	.156	.265	092 0005 07
F375	.505	.640	.156	.329	092 0005 08
F437	.585	.703	.188	.362	092 0005 09
F500	.650	.795	.188	.433	092 0005 10
F625	.785	1.030	.188	.526	092 0005 11
F750	1.030	1.218	.188	.593	092 0005 12
F875	1.203	1.406	.188	.732	092 0005 13
F1000	1.406	1.609	.188	.820	092 0005 14

TO ORDER OR SPECIFY, GIVE:

1. Product Code ..... ARC NT
2. Diameter ..... D
3. Length L
4. Material .....

MIDWEST FASTENERS, INC
450 Richard St, Miamisburg, OH 45342 | Toll Free: 800-852-8352 | Fax: 937-866-4174 | www.midwestfasteners.com

All information contained herein is subject to change without notice.

BENT - NO THREAD

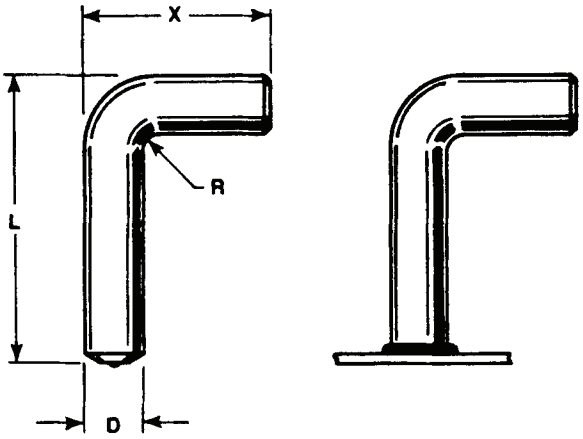

STUD

D	MIN. L	MIN. X	MIN. R	FERRULE CODE
1/4	1-1/8	1-1/4	.125	F250
5/16	1-1/4	1-1/2	.218	F312
3/8	1-1/2	1-1/2	.218	F375
7/16	1-5/8	1-5/8	.250	F437
1/2	1-3/4	1-3/4	.250	F500
5/8	1-7/8	2"	.312	F625
3/4	2-3/4	3"	.500	F750
7/8	3-1/2	3-3/8	.500	F875

MATERIAL:	**LOW CARBON STEEL**		**STAINLESS STEEL**
	C - 0.23% max.	P - 0.04% max.	AISI grade - 302/304/305 std.
	Mn - 0.90% max.	S - 0.05% max.	Other grades available upon request.
MECHANICAL PROPERTIES:			
	Tensile	60,000 psi (min.)	Values for various grades available upon request.
	Yield	50,000 psi (min.)	
	Elongation	20% (in 2 inches)	
PLATING:	Plating is not standard. Copper, nickel, and zinc available upon customer request.		Does not apply to Stainless.

FERRULES: Ferrules are component parts of studs. Not sold separately.

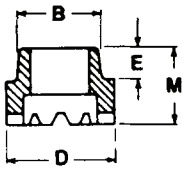

FERRULE

CODE	B	D	E	M	PART NO.
F250	.380	.455	.156	.390	092 0005 06
F312	.445	.578	.156	.390	092 0005 07
F375	.505	.640	.156	.390	092 0005 08
F437	.585	.703	.188	.422	092 0005 09
F500	.650	.795	.188	.438	092 0005 10
F625	.785	1.030	.188	.516	092 0005 11
F750	1.030	1.218	.188	.656	092 0005 12
F875	1.203	1.406	.188	.732	092 0005 13

TO ORDER OR SPECIFY, GIVE:

1. Product Code ..... ARC B-NT
2. Diameter ..... D
3. Length L
4. Length X
5. Material .....

450 Richard St, Miamisburg, OH 45342 | Toll Free: 800-852-8352 | Fax: 937-866-4174 | www.midwestfasteners.com

All information contained herein is subject to change without notice.

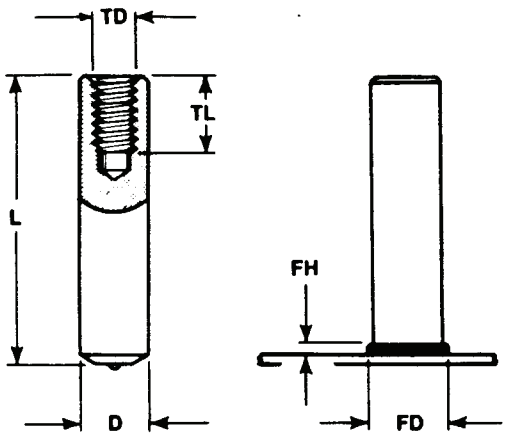

TAPPED - FULL BASE

STUD

D	MIN. L	TD	TL*	MAX. FD	MAX. FH	FERRULE CODE
1/4	9/16	8-32	1/4	.359	.109	F250
5/16	21/32	10-24	9/32	.437	.109	F312
3/8	13/16	1/4-20	3/8	.500	.125	F375
7/16	29/32	5/16-18	15/32	.578	.140	F437
1/2	1-1/32	3/8-16	9/16	.625	.156	F500
5/8	1-9/32	3/8-16	9/16	.625	.156	F500
3/4	1-3/8	1/2-13	3/4	.937	.250	F750
7/8	1-5/8	5/8-11	15/16	1.093	.312	F875

* Maximum standard tap depth equals 1-1/2 times tap diameter.

TAPS: Standard tap is UNC-2B, other taps are available.

MATERIAL:

LOW CARBON STEEL

C - 0.23% max. P - 0.04% max.
Mn - 0.90% max. S - 0.05% max.

STAINLESS STEEL

AISI grade - 302/304/305 std.
Other grades available upon request.

MECHANICAL PROPERTIES:

Tensile	60,000 psi (min.)
Yield	50,000 psi (min.)
Elongation	20% (in 2 inches)

Values for various grades available upon request.

PLATING: Plating is not standard. Copper nickel, and zinc available upon customer request.

Does not apply to Stainless.

FERRULES: Ferrules are component parts of studs. Not sold separately.

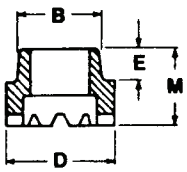

FERRULE

CODE	B	D	E	M	PART NO.
F250	.380	.455	.156	.390	092 0005 06
F312	.445	.578	.156	.390	092 0005 07
F375	.505	.640	.156	.390	092 0005 08
F437	.585	.703	.188	.422	092 0005 09
F500	.650	.795	.188	.438	092 0005 10
F625	.785	1.030	.188	.516	092 0005 11
F750	1.030	1.218	.188	.656	092 0005 12
F875	1.203	1.406	.188	.732	092 0005 13

TO ORDER OR SPECIFY, GIVE:

1. Product Code ..... ARC TAPFB
2. Diameter ..... D
3. Length L
4. Tap Diameter ..... TD
5. Tap Length ..... TL
6. Material .....

MIDWEST FASTENERS, INC

450 Richard St, Miamisburg, OH 45342 | Toll Free: 800-852-8352 | Fax: 937-866-4174 | www.midwestfasteners.com

All information contained herein is subject to change without notice.

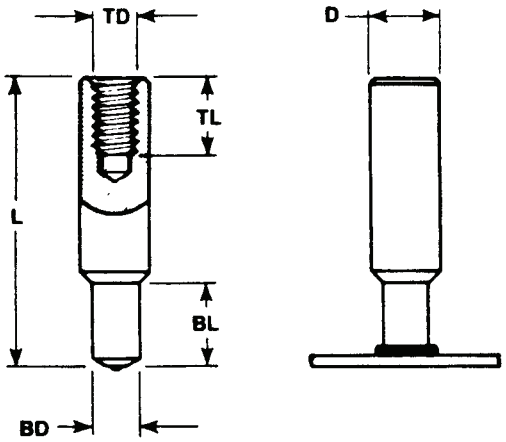

TAPPED - REDUCED BASE

STUD

D	MIN. L	TD	TL*	BD	BL	FERRULE CODE
3/8	1-1/2	1/4-20	3/8	.250	7/16	FS250
1/2	1-1/2	3/8-16	9/16	.375	7/16	FS375
5/8	1-1/2	7/16-14	21/32	.500	1/2	FS500
3/4	1-1/2	7/16-14	21/32	.500	1/2	FS500
7/8	2	5/8-11	15/16	.625	5/8	FS625
1″	2-1/2	3/4-10	1″	.750	5/8	FS750

* Maximum standard tap depth equals 1-1/2 times tap diameter.

TAPS: Standard tap is UNC-2B, other taps are available.

MATERIAL:

LOW CARBON STEEL

C - 0.23% max. P - 0.04% max.
Mn - 0.90% max. S - 0.05% max.

STAINLESS STEEL

AISI grade - 302/304/305 std.
Other grades available upon request.

MECHANICAL PROPERTIES:

Tensile	60,000 psi (min.)
Yield	50,000 psi (min.)
Elongation	20% (in 2 inches)

Values for various grades available upon request.

PLATING:

Plating is not standard. Copper, nickel, and zinc available upon customer request.

Does not apply to Stainless.

FERRULES: Ferrules are component parts of studs. Not sold separately.

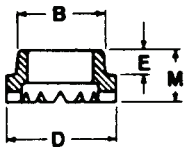

FERRULE

CODE	B	D	E	M	PART NO.
FS250	.380	.455	.125	.250	092 0005 06
FS375	.585	.675	.125	.250	092 0005 08
FS500	.785	.875	.156	.281	092 0005 10
FS625	.921	1.030	.187	.375	092 0005 11
FS750	1.043	1.203	.187	.375	092 0005 12

TO ORDER OR SPECIFY, GIVE:

1. Product Code ..... ARC TAPRB
2. Base Diameter ..... BD
3. Base Length ..... BL
4. Thread Diameter ..... TD
5. Thread Length ..... TL
6. Material .....

450 Richard St, Miamisburg, OH 45342 | Toll Free: 800-852-8352 | Fax: 937-866-4174 | www.midwestfasteners.com

All information contained herein is subject to change without notice.

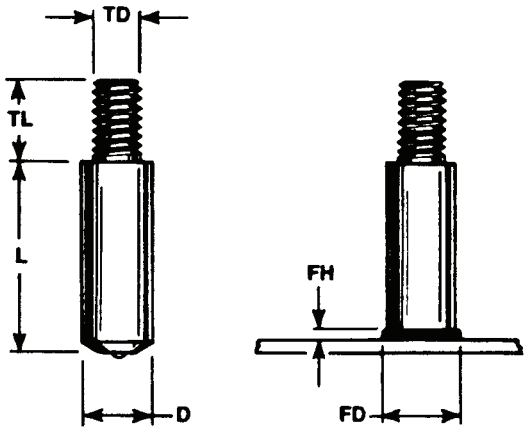

SHOULDER - THREADED

STUD

D	MIN. L	TD	MAX. TL	FD	FH	FERRULE CODE
1/4	.312	#8	.437	.359	.109	F250
5/16	.375	#10	.500	.437	.109	F312
3/8	.375	1/4	.750	.500	.125	F375
7/16	.437	5/16	.875	.578	.140	F437
1/2	.500	3/8	1.000	.627	.156	F500
5/8	.625	1/2	1.250	.796	.187	F625
3/4	.625	5/8	1.625	.937	.250	F750
7/8	.750	3/4	1.875	1.093	.312	F875

THREADS: Standard thread is UNC-2A (Rolled when possible), other threads available upon request.

MATERIAL:

LOW CARBON STEEL

C - 0.23% max. P - 0.04% max.
Mn - 0.90% max. S - 0.05% max.

STAINLESS STEEL

AISI grade - 302/304/305 std.
Other grades available upon request.

MECHANICAL PROPERTIES:

Tensile	60,000 psi (min.)
Yield	50,000 psi (min.)
Elongation	20% (in 2 inches)

Values for various grades available upon request.

PLATING: Plating is not standard. Copper, nickel, and zinc available upon customer request.

Does not apply to Stainless.

FERRULES: Ferrules are component parts of studs. Not sold separately.

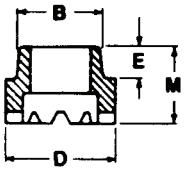

FERRULE

CODE	B	D	E	M	PART NO.
F250	.380	.455	.156	.390	092 0005 06
F312	.445	.578	.156	.390	092 0005 07
F375	.505	.640	.156	.390	092 0005 08
F437	.585	.703	.188	.422	092 0005 09
F500	.650	.795	.188	.438	092 0005 10
F625	.785	1.030	.188	.516	092 0005 11
F750	1.030	1.218	.188	.656	092 0005 12
F875	1.203	1.406	.188	.732	092 0005 13

TO ORDER OR SPECIFY, GIVE:

1. Product Code.....ARC SH-T
2. Diameter.....D
3. Length.....L
4. Thread Diameter.....TD
5. Thread Length.....TL
6. Material.....

MIDWEST FASTENERS, INC
450 Richard St, Miamisburg, OH 45342 | Toll Free: 800-852-8352 | Fax: 937-866-4174 | www.midwestfasteners.com

All information contained herein is subject to change without notice.

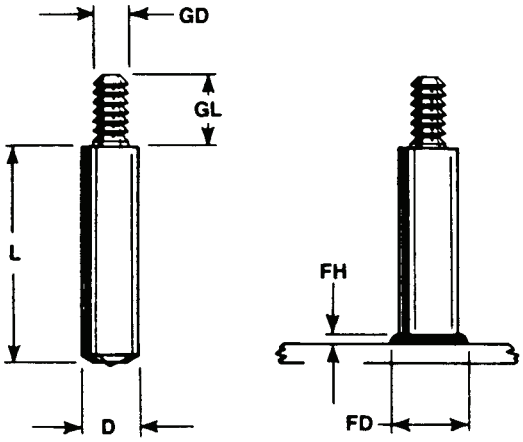

SHOULDER - ANNULAR GROVE

STUD

D	MIN. L	GD	GL	FD	FH	FERRULE CODE
5/16	1″	.187	.375	.437	.109	F312
5/16	1″	.187	.437	.437	.109	F312

MATERIAL:	**LOW CARBON STEEL**		**STAINLESS STEEL**
	C - 0.23% max.	P - 0.04% max.	AISI grade - 302/304/305 std.
	Mn - 0.90% max.	S - 0.05% max.	Other grades available upon request.
MECHANICAL PROPERTIES:			
	Tensile	60,000 psi (min.)	Values for various grades available upon request.
	Yield	50,000 psi (min.)	
	Elongation	20% (in 2 inches)	
PLATING:	Plating is not standard. Copper, nickel, and zinc available upon customer request.		Does not apply to Stainless.

FERRULES: Ferrules are component parts of studs. Not sold separately.

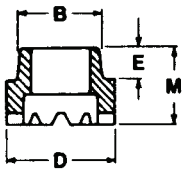

FERRULE

CODE	B	D	E	M	PART NO.
F312	.445	.578	.156	.390	092 0005 07

TO ORDER OR SPECIFY, GIVE:

1. Product Code ..... ARC SH-AG
2. Diameter ..... D
3. Length L
4. Groove Diameter ..... GD
5. Groove Length ..... GL
6. Material .....

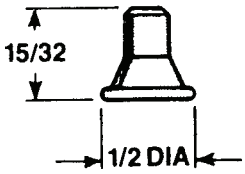

WAG AL
"Setting Cap" (Aluminum)

CAP:	Sold separately. Not a component part of stud.
CAP-SETTING TOOL:	For installing WAG AL, available from stock. PART NO. – 102-0100-08.

450 Richard St, Miamisburg, OH 45342 | Toll Free: 800-852-8352 | Fax: 937-866-4174 | www.midwestfasteners.com

All information contained herein is subject to change without notice.

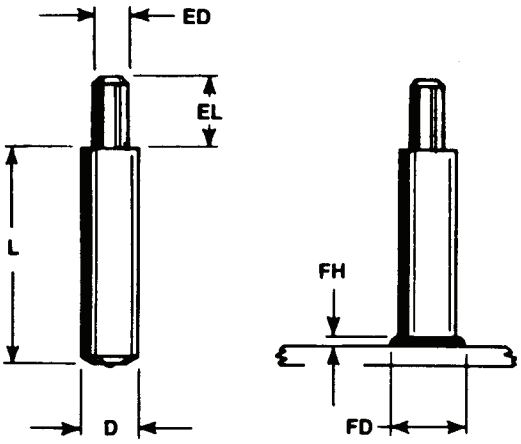

SHOULDER - NO THREAD

STUD

D	MIN. L	ED	EL	FD	FH	FERRULE CODE
5/16	3/8	3/16	3/16	.437	.109	F312
3/8	3/8	3/16	3/16	.500	.125	F375
1/2	1/2	3/8	45/64	.627	.156	F500

	LOW CARBON STEEL		STAINLESS STEEL
MATERIAL:	C - 0.23% max. Mn - 0.90% max.	P - 0.04% max. S - 0.05% max.	AISI grade - 302/304/305 std. Other grades available upon request.
MECHANICAL PROPERTIES:	Tensile Yield Elongation	60,000 psi (min.) 50,000 psi (min.) 20% (in 2 inches)	Values for various grades available upon request.
PLATING:	Plating is not standard. Copper, nickel, and zinc available upon customer request.		Does not apply to Stainless.

FERRULES: Ferrules are component parts of studs. Not sold separately.

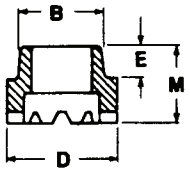

FERRULE

CODE	B	D	E	M	PART NO.
F312	.445	.578	.156	.390	092 0005 07
F375	.505	.640	.156	.390	092 0005 08
F500	.560	.795	.188	.438	092 0005 10

TO ORDER OR SPECIFY, GIVE:

1. Product Code.....ARC SH-NT
2. Diameter.....D
3. Length.....L
4. Groove Diameter.....ED
5. Groove Length.....EL
6. Material.....

MIDWEST FASTENERS, INC

450 Richard St, Miamisburg, OH 45342 | Toll Free: 800-852-8352 | Fax: 937-866-4174 | www.midwestfasteners.com

All information contained herein is subject to change without notice.

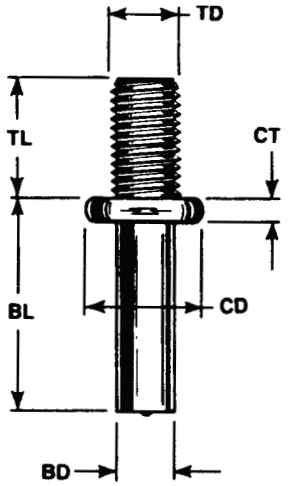

COLLAR

STUD

TD	MIN TL	BD	MIN BL	CD	CT	FERRULE CODE
1/4	.375	.215	.500	.500	.093	C250
5/16	.375	.275	.500	.562	.093	C312
3/8	.500	.330	.500	.625	.109	C375
1/2	.625	.448	.593	.750	.140	C500

THREADS: Standard thread is UNC-2A (Rolled when possible), other threads are available upon request. Maximum standard thread length is 3-7/8".

MATERIAL:

LOW CARBON STEEL

C - 0.23% max. P - 0.04% max.
Mn - 0.90% max. S - 0.05% max.

STAINLESS STEEL

AISI grade - 302/304/305 std.
Other grades available upon request.

MECHANICAL PROPERTIES:

Tensile	60,000 psi (min.)
Yield	50,000 psi (min.)
Elongation	20% (in 2 inches)

Values for various grades available upon request.

PLATING: Plating is not standard. Copper, nickel, and zinc available upon customer request.

Does not apply to Stainless.

FERRULES: Ferrules are component parts of studs. Not sold separately.

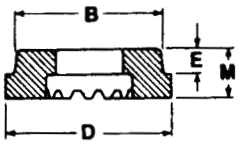

FERRULE

CODE	B	D	E	M	PART NO.
C250	.785	.875	.125	.250	092 0014 06
C312	.785	.875	.125	.250	092 0014 07
C375	.785	.875	.125	.250	092 0014 08
C500	1.030	1.203	.125	.281	092 0014 10

TO ORDER OR SPECIFY, GIVE:

1. Product Code.....ARC COL
2. Base Diameter.....BD
3. Base Length.....BL
4. Thread Diameter.....TD
5. Thread Length.....TL
6. Material.....

450 Richard St, Miamisburg, OH 45342 | Toll Free: 800-852-8352 | Fax: 937-866-4174 | www.midwestfasteners.com

All information contained herein is subject to change without notice.

BENT-COLLAR

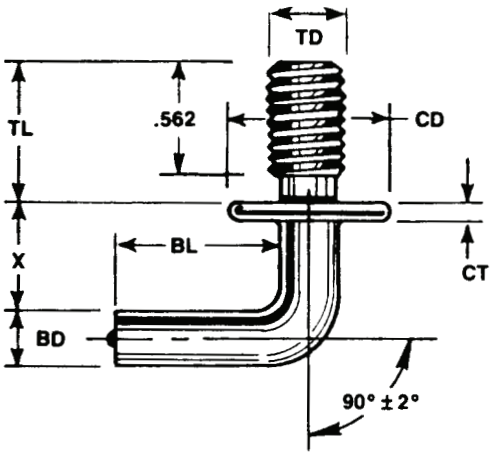

STUD

TD	STD. TL	MIN BL	BD	CD	CT	X
3/8-16	1.375	.625	.331	5/8	.109	5/8

THREADS: Standard thread is UNC-2A (Rolled when possible), other threads are available upon request. Maximum standard thread length is 3-7/8".

	LOW CARBON STEEL		STAINLESS STEEL
MATERIAL:	C - 0.23% max.	P - 0.04% max.	AISI grade - 302/304/305 std.
	Mn - 0.90% max.	S - 0.05% max.	Other grades available upon request.
MECHANICAL PROPERTIES:	Tensile	60,000 psi (min.)	Values for various grades available upon request.
	Yield	50,000 psi (min.)	
	Elongation	20% (in 2 inches)	
PLATING:	Plating is not standard. Copper, nickel, and zinc available upon customer request.		Does not apply to Stainless.

FERRULES: Ferrules are component parts of studs. Not sold separately.

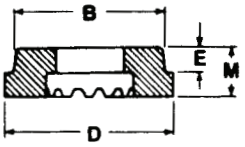

FERRULE

CODE	B	D	E	M	PART NO.
C375	.785	.875	.125	.250	092 0014 08

TO ORDER OR SPECIFY, GIVE:

1. Product Code ..... ARC B-COL
2. Base Diameter ..... BD
3. Base Length ..... BL
4. Thread Diameter ..... TD
5. Thread Length ..... TL
6. Material .....

MIDWEST FASTENERS, INC

450 Richard St, Miamisburg, OH 45342 | Toll Free: 800-852-8352 | Fax: 937-866-4174 | www.midwestfasteners.com

All information contained herein is subject to change without notice.

ANNULAR RING (NAVY)

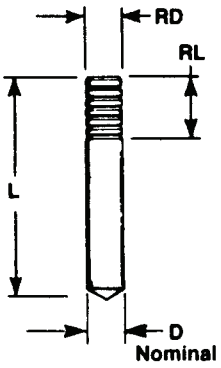

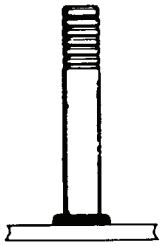

STUD

NOM. D	MIN. L	RD	RL	FERRULE CODE
3/16	3/4"*	.175	.312	F187

* Ferrules used with Studs 3/4" long are special "short F" ferrules.

MATERIAL:	**LOW CARBON STEEL** C - 0.23% max. P - 0.04% max. Mn - 0.90% max. S - 0.05% max. Conforms to: MIL-S-24149 Type: I Class: III	**STAINLESS STEEL** AISI grade - 302/304/305 std. Other grades available upon request.
MECHANICAL PROPERTIES:	Tensile 60,000 psi (min.) Yield 50,000 psi (min.) Elongation 20% (in 2 inches)	Values for various grades available upon request.
PLATING:	Plating is not standard. Copper, nickel, and zinc available upon customer request.	Does not apply to Stainless.

FERRULES: Ferrules are component parts of studs. Not sold separately.

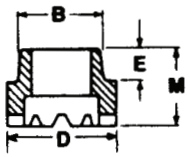

FERRULE

CODE	B	D	E	M	PART NO.
F187	.305	.380	.156	.390	092-0005-05

TO ORDER OR SPECIFY, GIVE:

1. Product Code ..... ARC AR
2. Diameter ..... D
3. Length L
4. Material .....

PART NO. MCAL-625-875

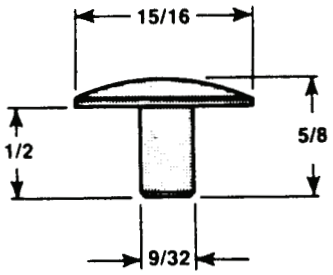

"MUSHROOM NAVY CAP" (Aluminum)

CAP: Sold separately. Not a component part of stud.

450 Richard St, Miamisburg, OH 45342 | Toll Free: 800-852-8352 | Fax: 937-866-4174 | www.midwestfasteners.com

All information contained herein is subject to change without notice.

RECTANGULAR-PLAIN

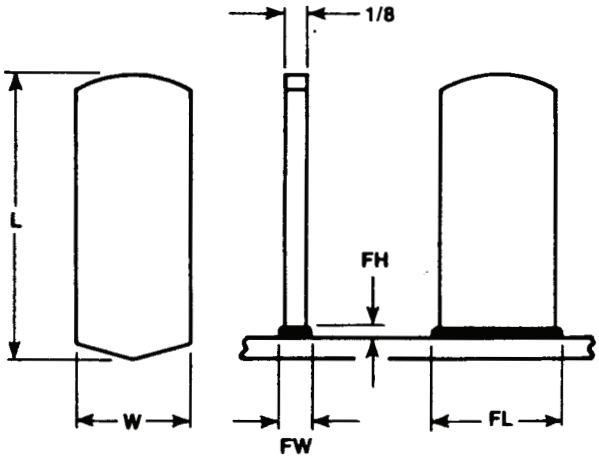

STUD					
W	MIN. L	FW	FL	FH	FERRULE CODE
3/8	7/8	.218	.437	.125	R375
5/8	1"	.218	.687	.156	R625

MATERIAL:	**LOW CARBON STEEL**		**STAINLESS STEEL**
	C - 0.23% max.	P - 0.04% max.	AISI grade - 302/304/305 std.
	Mn - 0.90% max.	S - 0.05% max.	Other grades available upon request.
MECHANICAL PROPERTIES:			
	Tensile	60,000 psi (min.)	Values for various grades available upon request.
	Yield	50,000 psi (min.)	
	Elongation	20% (in 2 inches)	
PLATING:	Plating is not standard. Copper, nickel, and zinc available upon customer request.		Does not apply to Stainless.

FERRULES: Ferrules are component parts of studs. Not sold separately.

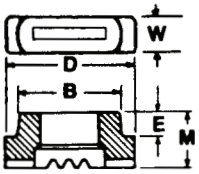

FERRULE					
CODE	B	D	E	M	PART NO.
R375	.505	.625	.156	.390	092 0020 08
R625	.921	.500	.188	.438	092 0020 11

TO ORDER OR SPECIFY, GIVE:

1. Product Code ..... ARC R-PL
2. Size ..... 1/8 x W
3. Length L
4. Material .....

MIDWEST FASTENERS, INC

450 Richard St, Miamisburg, OH 45342 | Toll Free: 800-852-8352 | Fax: 937-866-4174 | www.midwestfasteners.com

All information contained herein is subject to change without notice.

RECTANGULAR-
'T' SLOTTED

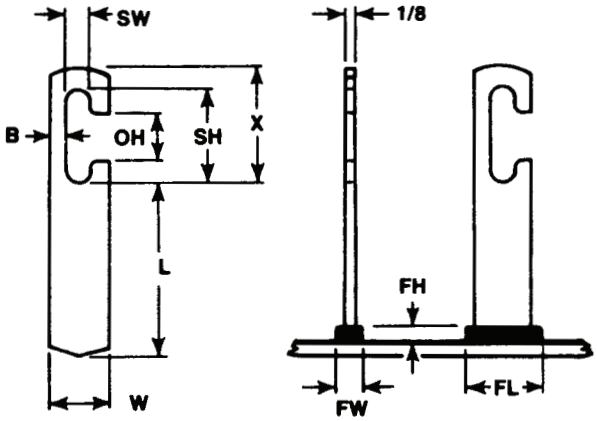

STUD

W	MIN. L	OH	SH	X	SW
3/8	1/2	.322	.531	.765	.130
5/8	1/2	.500	1.000	1.250	.255

STUD (CONTINUED)

B	FW	FL	FH	FERRULE CODE
.122	.218	.437	.125	R375
.185	.218	.687	.156	R625

	LOW CARBON STEEL		STAINLESS STEEL
MATERIAL:	C - 0.23% max.	P - 0.04% max.	AISI grade - 302/304/305 std.
	Mn - 0.90% max.	S - 0.05% max.	Other grades available upon request.
MECHANICAL PROPERTIES:			
	Tensile	60,000 psi (min.)	Values for various grades available upon request.
	Yield	50,000 psi (min.)	
	Elongation	20% (in 2 inches)	
PLATING:	Plating is not standard. Copper, nickel, and zinc available upon customer request.		Does not apply to Stainless.

FERRULES: Ferrules are component parts of studs. Not sold separately.

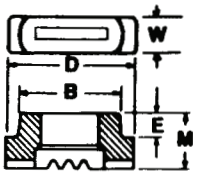

FERRULE

CODE	B	D	E	M	PART NO.
R375	.505	.625	.156	.390	092 0020 08
R625	.921	.1.093	.188	.438	092 0020 11

TO ORDER OR SPECIFY, GIVE:

1. Product Code.....ARC R-TS
2. Size.....1/8 x W
3. Length L
4. Material .....

450 Richard St, Miamisburg, OH 45342 | Toll Free: 800-852-8352 | Fax: 937-866-4174 | www.midwestfasteners.com

All information contained herein is subject to change without notice.

RECTANGULAR-WITH HOLE

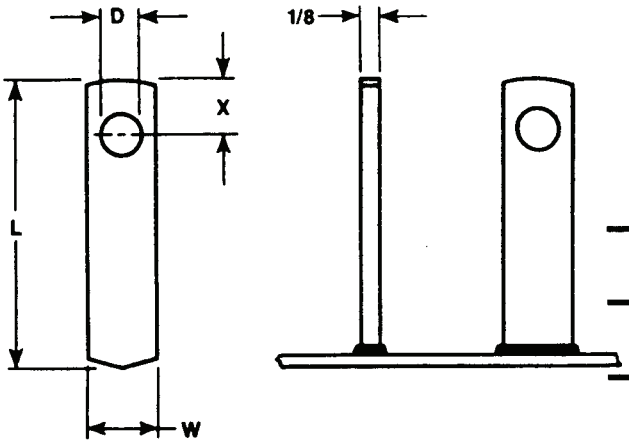

STUD				
W	MIN. L	D	X	FERRULE CODE
3/8	7/8	.203	5/16	R375
5/8	1"	.312	5/16	R625

MATERIAL:	**LOW CARBON STEEL**		**STAINLESS STEEL**
	C - 0.23% max.	P - 0.04% max.	AISI grade - 302/304/305 std.
	Mn - 0.90% max.	S - 0.05% max.	Other grades available upon request.
MECHANICAL PROPERTIES:			
	Tensile	60,000 psi (min.)	Values for various grades available upon request.
	Yield	50,000 psi (min.)	
	Elongation	20% (in 2 inches)	
PLATING:	Plating is not standard. Copper, nickel, and zinc available upon customer request.		Does not apply to Stainless.

FERRULES: Ferrules are component parts of studs. Not sold separately.

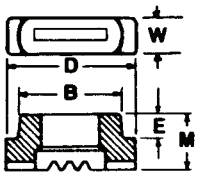

FERRULE					
CODE	B	D	E	M	PART NO.
R375	.505	.625	.156	.390	092 0020 08
R625	.921	.500	.188	.438	092 0020 11

TO ORDER OR SPECIFY, GIVE:

1. Product Code.....ARC R-WH
2. Size.....1/8 x W
3. Length L
4. Material .....

MIDWEST FASTENERS, INC

450 Richard St, Miamisburg, OH 45342 | Toll Free: 800-852-8352 | Fax: 937-866-4174 | www.midwestfasteners.com

All information contained herein is subject to change without notice.

KNURLED

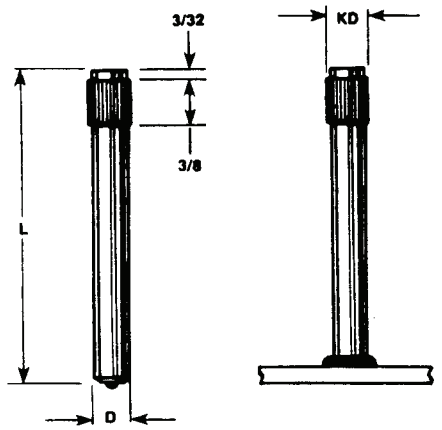

STUD

D	MIN. L	KD	FERRULE CODE
5/16	1"	.327	F312

MATERIAL: **LOW CARBON STEEL**

C - 0.23% max. P - 0.04% max.
Mn - 0.90% max. S - 0.05% max.

MECHANICAL PROPERTIES:

Tensile 60,000 psi (min.)
Elongation 20% (in 2 inches)

FERRULES: Ferrules are component parts of studs. Not sold separately.

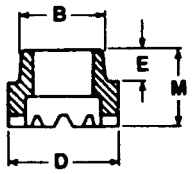

FERRULE

CODE	B	D	E	M	PART NO.
F312	.445	.578	.156	.390	092 0005 07

TO ORDER OR SPECIFY, GIVE:

1. Product Code.....ARC KNRL
2. Diameter.....D
3. Length.....L
4. Material.....

Part No. DPLM-200-312

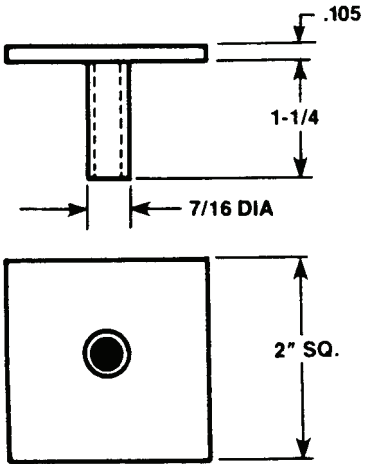

DRIVE PLATE (DPLM) 2" SQUARE

DRIVE PLATE: Sold separately. Not a component part of stud.

450 Richard St, Miamisburg, OH 45342 | Toll Free: 800-852-8352 | Fax: 937-866-4174 | www.midwestfasteners.com

All information contained herein is subject to change without notice.

HEADED CONCRETE ANCHOR

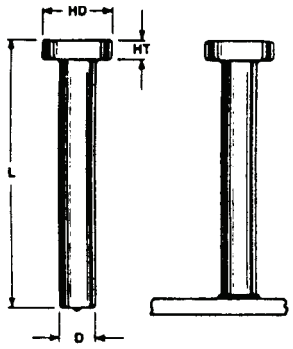

STUD				
D	MIN L	HD	HT	FERRULE CODE*
1/4	3/4	1/2	3/16	F250
3/8	3/4	3/4	9/32	F375
1/2	1"	1"	5/16	F500
5/8	1"	1-1/4	5/16	F625

MATERIAL: **LOW CARBON STEEL**
AISI C1010 through C1020

MECHANICAL PROPERTIES:

Tensile	55,000 psi (min.)
Elongation	20% (in 2 inches)

OTHER MATERIALS: Also available in stainless steel.

SPECS: ALL MIDWEST FASTENERS ARC HCA studs meet AWS specifications.
Test reports available upon request.

FERRULES: Ferrules are component parts of studs. Not sold separately.
Ferrule exterior dimensions are available upon request.

****HEADED CONCRETE ANCHORS*** are available for welding to flat surface, inside angles, and outside angles. Each of these applications requires the proper style stud and ferrule, so please specify your application when ordering studs.

FLAT SURFACE (F)

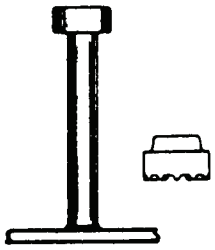

INSIDE ANGLE (IA)

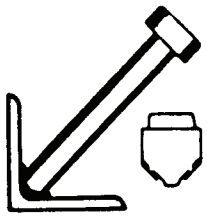

OUTSIDE ANGLE (OA)

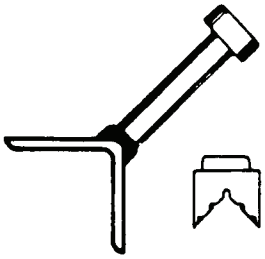

TO ORDER OR SPECIFY, GIVE:

1. Product Code ..... ARC HCA
2. Diameter ..... D
3. Length L
4. Material .....
5. Welding Application .....

MIDWEST FASTENERS, INC
450 Richard St, Miamisburg, OH 45342 | Toll Free: 800-852-8352 | Fax: 937-866-4174 | www.midwestfasteners.com

All information contained herein is subject to change without notice.

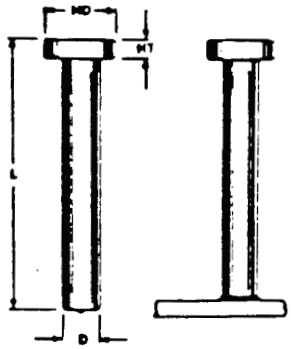

SHEAR CONNECTOR

STUD				
D	MIN. L	HD	HT	FERRULE CODE*
3/4	1-1/2	1-1/4	3/8	F750
7/8	2	1-3/8	3/8	F875

MATERIAL: **LOW CARBON STEEL**
AISI C1015, C1018, or C1020

MECHANICAL PROPERTIES:

Tensile	60,000 psi (min.)
Yield	50,000 psi (min.)
Elongation	20% (min.)
Reduction of Area	50% (min.)

SPECS: ALL MIDWEST FASTENERS ARC SC studs meet AWS, AASHTO, and ICBO specifications. Test reports available upon request.

FERRULES: Ferrules are component parts of studs. Not sold separately.
Ferrule exterior dimensions are available upon request.

****SHEAR CONNECTORS:*** Available for welding to flat surface, inside angles, outside angles, and "thru deck." Each of these applications requires the proper style stud and ferrule, so please specify your application when ordering studs.

FLAT SURFACE (F)

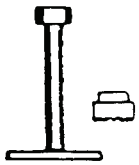

INSIDE ANGLE (IA)

OUTSIDE ANGLE (OA)

WELD THRU DECK (WTD)

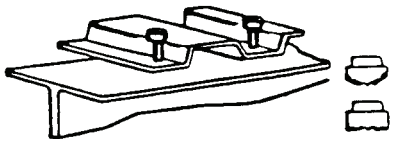

TO ORDER OR SPECIFY, GIVE:

1. Product Code.....ARC SC
2. Diameter.....D
3. Length.....L
4. Material.....
5. Welding Application.....

450 Richard St, Miamisburg, OH 45342 | Toll Free: 800-852-8352 | Fax: 937-866-4174 | www.midwestfasteners.com

All information contained herein is subject to change without notice.

MIDWEST FASTENERS ARC STUD WELDING SYSTEMS AND PORTABLE POWER SUPPLIES

UA 500

A single-phase portable system designed to weld from #10 (4 mm) through 1/2" (14 mm) diameter weld base arc studs. This system features plug-in solid state circuitry accessible from rear door. Continuous current control from 250 to 900 amps. Continuous time control from .05 to .7 seconds. The UA 500 arc welding system also features a built-in chuck saver module. System comes complete with Solid State Power Supply, 25 feet of 1/0 ground cable with heavy duty clamp, 50 feet of 1/0 combination cable and stud welding gun with legs and foot piece.
Weight: 150 lb. *Dimensions:* 16" wide x 16" deep x 41" high.

UA 1000

This unique, multi-purpose three-phase system is designed for arc stud welding, stick welding and arc air gouging. The UA 1000 welds all sizes of arc studs from #10 (4mm) through 5/8" (16 mm) weld base arc studs, and all size electrodes in stick mode, and arc air gouging up to 450 amperes. This system features solid state full converter bridge output, constant current output, chuck saver, line voltage compensated, regulated timing, fused control circuitry, controlled hot plunge and low open circuit voltage.
Weight: 500 lb. *Dimensions:* 22-1/4" wide x 35-3/4" deep x 30" high.

UA 1800

This multi-purpose system also features arc stud welding, stick welding and arc air gouging. The UA 1800 welds all size arc studs from #10 (4 mm) through 7/8" (22mm) diameter studs and all sizes of electrodes in stick mode and arc air gouging up to 750 amperes. The UA 1800 arc stud welding system features solid state full converter bridge output constant current output, chuck saver, line voltage compensated, regulated timing, fused control circuitry, controlled hot plunge, low open circuit voltage and reduced weld current start. The UA 1800 comes complete with one (1) heavy duty arc welding gun with legs and foot piece, one (1) 50-foot length of 4/0 combination cable extension set and one (1) 25-foot length of 4/0 ground cable with heavy duty "C" clamp.
Weight: 650 lb. *Dimensions:* 22-1/4" wide x 40" deep x 30" high.

UA 100

This lightweight portable welding controller has a welding range of 12 GA (2.6 mm) through 5/8" (16 mm) diameter weld studs. The UA 100 features a rugged steel enclosure, plug-in circuitry making all components field serviceable, solid state timer that allows repeatability and dependability, power on safety switch and accessible front panel fuse. The UA 100 system comes complete with one (1) stud welding gun with legs and foot piece, one (1) 50-foot length of 1/0 combination extension cable set, one (1) 25-foot length of 1/0 generator cable and one (1) 25-foot length of 1/0 ground cable with heavy duty "C" clamp.
Weight: 25 lb. *Dimensions:* 11-1/2" wide x 10" deep x 11-3/4" high.

MIDWEST FASTENERS, INC.

450 Richard St.
Miamisburg, OH 45342
Toll Free: 800-852-8352 • Fax: 937-866-4174
www.midwestfasteners.com

MIDWEST FASTENERS, INC.

Phone: 1-800-852-8352 • FAX: 937-866-4174
website: www.midwestfasteners.com

INSULATION FASTENERS

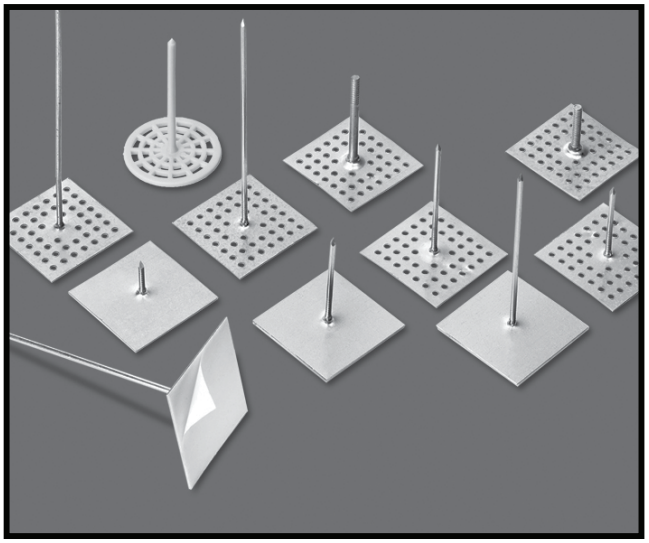

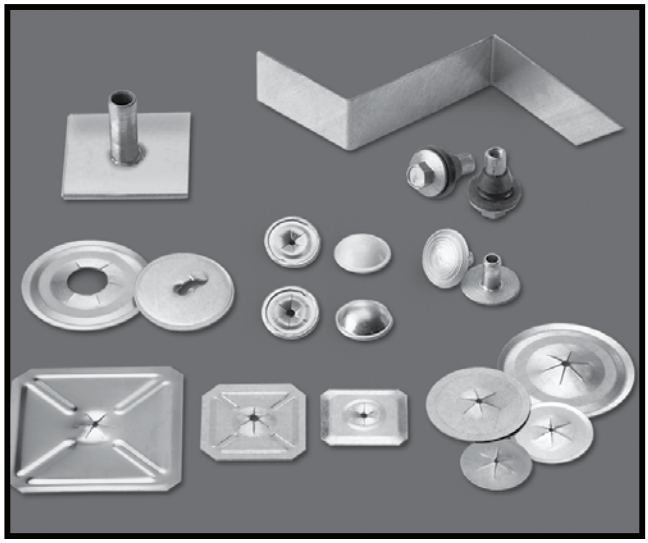

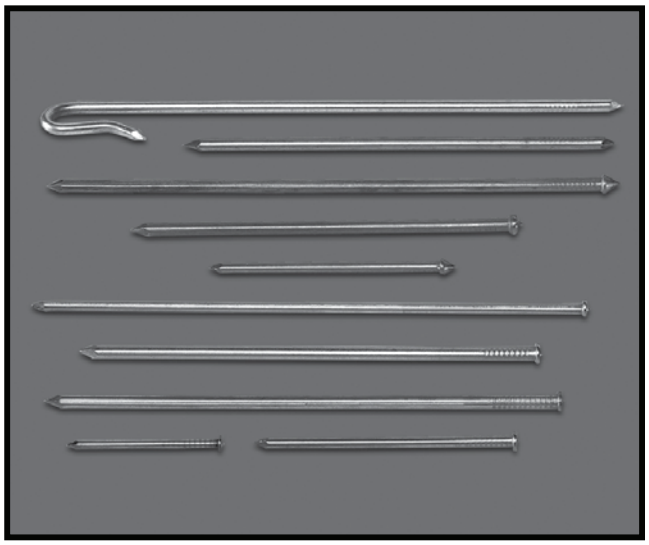

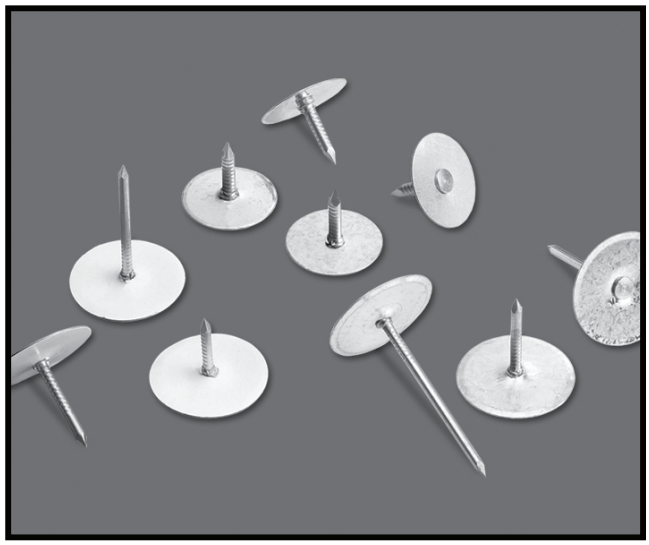

TABLE OF CONTENTS

1. WELD PINS

Capacitor Discharge 1-1
Power Tip 1-2
Sure Fire 1-3
Conical Tip 1-4
Double Pointed 1-5
J-Hook 1-6

2. CUP HEAD WELD PINS

Cup Head Weld Pins (CD) 2-1
Cup Head Pin (Duro Dyne Style) 2-2

3. WASHERS, CAPS & NUTS

Self-Locking Washers (Square) 3-1
Self-Locking Washers (Round) 3-2
Capped Speed Washer 3-3
Lacing Washer 3-3
Lacing Ring 3-3
Annular Ring Cap 3-4
Keyhole Slotted Washer 3-4
Annular Groove Cap 3-5
Cap Setting Tool 3-5
Panel Nut 3-5
Combination Nut 3-6

4. INSULATION HANGERS

Spindle 4-1
Self-Stick 4-2
Self-Stick Guidelines 4-3
Nylon 4-4
Annular Ring Anchor Bolt 4-5
Threaded Anchor Bolt 4-6
Safing "Z" Clip 4-7

5. ADHESIVES

IHA-177 General Purpose 5-1
Directions For Use 5-2
Cautionary Information 5-3

6. LACING ANCHORS

Lacing Anchors 6-1
Slim Lacing Anchors 6-1S
Bergen Hook 6-2
Quilting Pins 6-3
Lacing Hook 6-4
L100 Lacing Washer 6-4
Lacing Ring 6-4

MIDWEST FASTENERS, INC

450 Richard St, Miamisburg, OH 45342 | Toll Free: 800-852-8352 | Fax: 937-866-4174 | www.midwestfasteners.com

All information contained herein is subject to change without notice.

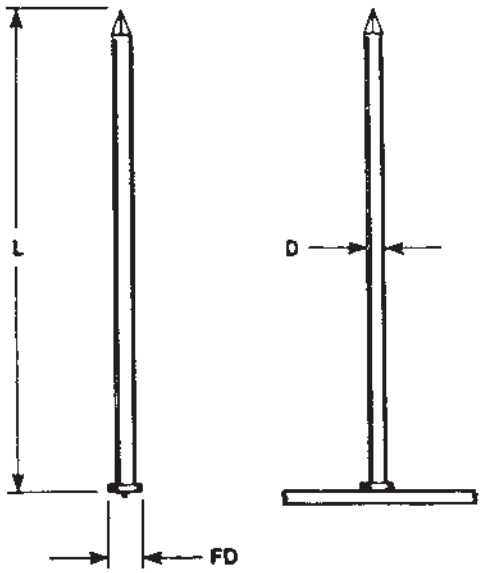

CAPACITOR DISCHARGE (CD)

PIN

SIZE	D	STEEL FD	ALUM. FD
14GA	.080	.160	–
12GA	.105	.180	.230
3MM	.118	.190	–
10GA	.135	.195	.250

MATERIAL:	**LOW CARBON STEEL** C - 0.23% max. P - 0.04% max. Mn - 0.90% max. S - 0.05% max.	**STAINLESS STEEL** AISI grade - 302/304/305 std. Other grades available upon request.
MECHANICAL PROPERTIES:	Tensile 60,000 psi (min.) Yield 50,000 psi (min.) Elongation 20% (in 2 inches)	Values for various grades available upon request.
PLATING:	Galvanized and Copper plating are available.	Does not apply to Stainless.
ANNEALING:	Pins are annealed where required.	Does not apply.

MATERIAL: ALUMINUM
Alloy - 1110-H14 std. Other alloys available upon request.

MECHANICAL PROPERTIES:
Values for various alloys available upon request.

APPLICATION: This is the standard weld pin used for most applications.

WASHERS: Self-locking washers are available in a variety of sizes, shapes, and materials.

TO ORDER OR SPECIFY, GIVE:

1. Product Code.....WP
2. Size.....
3. Length L
4. Material .....

450 Richard St, Miamisburg, OH 45342 | Toll Free: 800-852-8352 | Fax: 937-866-4174 | www.midwestfasteners.com

All information contained herein is subject to change without notice.

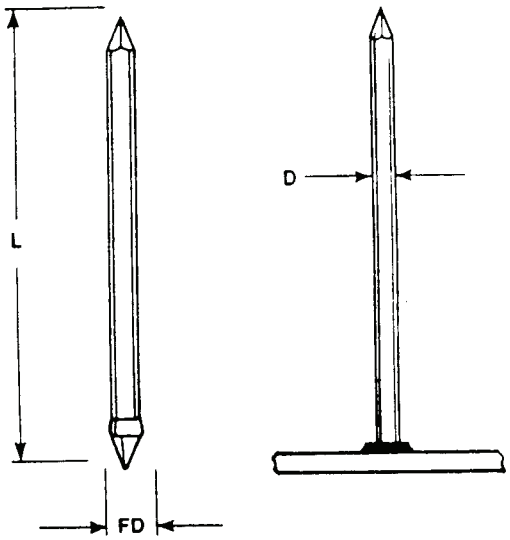

"POWER TIP" (CD)

PIN

SIZE	D	L	FD
12GA	.105	AS REQUIRED	.171
10GA	.135	AS REQUIRED	.187

MATERIAL:	**LOW CARBON "MILD" STEEL**		**STAINLESS STEEL**
	C - 0.23% max.	P - 0.04% max.	AISI grade - 302/304/305 std.
	Mn - 0.90% max.	S - 0.05% max.	Other grades available upon request.
MECHANICAL PROPERTIES:			
	Tensile	60,000 psi (min.)	Values for various grades available upon
Yield	50,000 psi (min.)		request.
	Elongation	20% (in 2 inches)	
PLATING:	Galvanized and Copper plating are available.		Does not apply to Stainless.
ANNEALING:	Can be annealed if required.		Can be annealed if required.

APPLICATION: Ideally suited for welding to surfaces covered with mill scale, rust, or paint without costly preparation.

WASHERS: Self-locking washers are available in a variety of sizes, shapes, and materials.

TO ORDER OR SPECIFY, GIVE:

1. Product Code ..... PT
2. Size .....
3. Length L
4. Material .....

MIDWEST FASTENERS, INC

450 Richard St, Miamisburg, OH 45342 | Toll Free: 800-852-8352 | Fax: 937-866-4174 | www.midwestfasteners.com

All information contained herein is subject to change without notice.

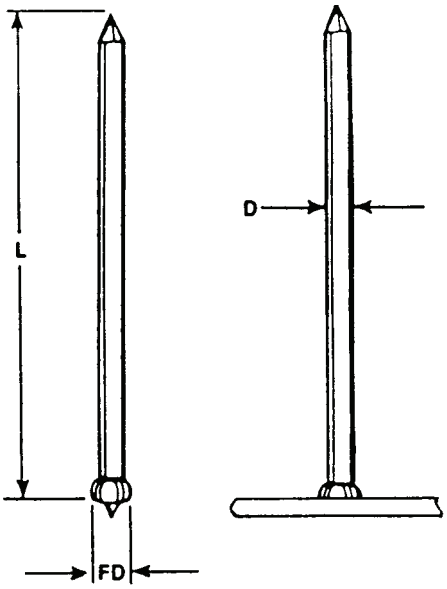

"SURE-FIRE" (CD)

PIN

SIZE	D	L	FD
12GA	.105	AS REQUIRED	.175
10GA	.135	AS REQUIRED	.195

MATERIAL:	**LOW CARBON "MILD" STEEL**		**STAINLESS STEEL**
	C - 0.23% max.	P - 0.04% max.	AISI grade - 302/304/305 std.
	Mn - 0.90% max.	S - 0.05% max.	Other grades available upon request.
MECHANICAL PROPERTIES:			
	Tensile	60,000 psi (min.)	Values for various grades available upon
Yield	50,000 psi (min.)		request.
	Elongation	20% (in 2 inches)	
PLATING:	Galvanized and Copper plating are available.		Does not apply to Stainless.
ANNEALING:	Can be annealed if required.		Can be annealed if required.

APPLICATION: Ideally suited for welding to surfaces covered with mill scale, rust, or paint.

WASHERS: Self-locking washers are available in a variety of sizes, shapes, and materials.

TO ORDER OR SPECIFY, GIVE:

1. Product Code ..... SF
2. Size .....
3. Length L
4. Material .....

450 Richard St, Miamisburg, OH 45342 | Toll Free: 800-852-8352 | Fax: 937-866-4174 | www.midwestfasteners.com

All information contained herein is subject to change without notice.

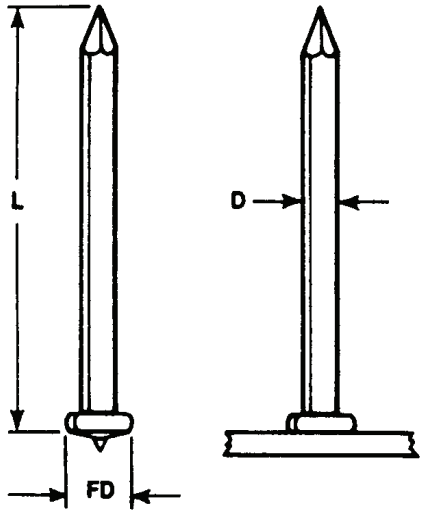

CONICAL TIP (CD)

PIN

SIZE	D	L	FD
12GA	.105	AS REQUIRED	.220
10GA	.135	AS REQUIRED	.250

MATERIAL: **ALUMINUM**
Alloy - 1100-H14 std. Other alloys available upon request.

MECHANICAL PROPERTIES:
Values for various alloys available upon request.

APPLICATION: Ideally suited for welding with production Stud Welding systems and for STUCCO embossed panels.

WASHERS: Self-locking washers are available in a variety of sizes, shapes, and materials.

TO ORDER OR SPECIFY, GIVE:

1. Product Code.....CT
2. Size.....
3. Length L
4. Material .....

MIDWEST FASTENERS, INC
450 Richard St, Miamisburg, OH 45342 | Toll Free: 800-852-8352 | Fax: 937-866-4174 | www.midwestfasteners.com
All information contained herein is subject to change without notice.

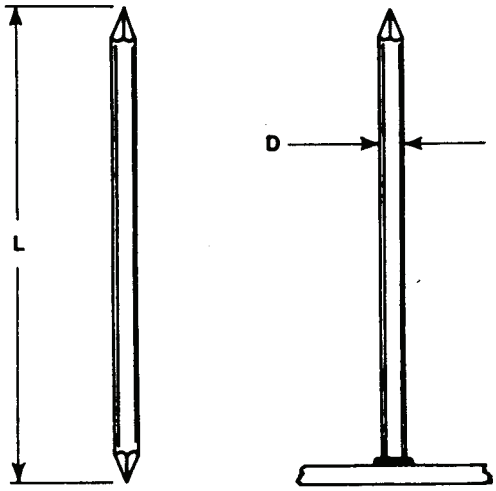

DOUBLE POINTED (ARC)

PIN			
SIZE	D*	L	FERRULE CODE
10GA	.135	AS REQUIRED	F135

*Other diameters available upon request.

MATERIAL:	**LOW CARBON STEEL** C - 0.23% max. P - 0.04% max. Mn - 0.90% max. S - 0.05% max.		**STAINLESS STEEL** AISI grade - 302/304/305 std. Other grades available upon request.
MECHANICAL PROPERTIES:	Tensile 60,000 psi (min.) Yield 50,000 psi (min.) Elongation 20% (in 2 inches)		Values for various grades available upon request.
PLATING:	Galvanized and Copper plating are available.		Does not apply to Stainless.
ANNEALING:	Can be annealed where required.		Can be annealed if required.

APPLICATION: This is the standard weld pin used when only arc stud welding equipment is available.

WASHERS: Self-locking washers are available in a variety of sizes, shapes, and materials.

FERRULES: Ferrules are component parts of studs. Not sold separately.

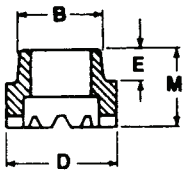

FERRULE					
CODE	B	D	E	M	PART NO.
F135	.281	.375	.156	.390	092 0005 04

TO ORDER OR SPECIFY, GIVE:

1. Product Code.....DP
2. Size.....
3. Length L
4. Material .....

450 Richard St, Miamisburg, OH 45342 | Toll Free: 800-852-8352 | Fax: 937-866-4174 | www.midwestfasteners.com

All information contained herein is subject to change without notice.

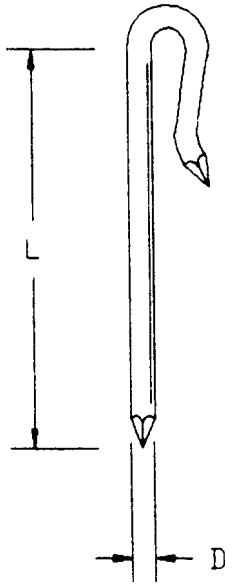

"J"- HOOK

PIN		
SIZE	**D***	**L**
10GA	.135	AS REQUIRED

*Other diameters available upon request.

MATERIAL:	**LOW CARBON STEEL**		**STAINLESS STEEL**
	C - 0.23% max.	P - 0.04% max.	AISI grade - 302/304/305 std.
	Mn - 0.90% max.	S - 0.05% max.	Other grades available upon request.
MECHANICAL PROPERTIES:			
	Tensile	60,000 psi (min.)	Values for various grades available upon
Yield	50,000 psi (min.)		request.
	Elongation	20% (in 2 inches)	
PLATING:	Galvanized and Copper plating are available.		Does not apply to Stainless.
ANNEALING:	Can be annealed where required.		Can be annealed if required.

APPLICATION: This is the standard insulation fastener used to secure insulation to wire road mesh.

WASHERS: Self-locking washers are available in a variety of sizes, shapes, and materials.

TO ORDER OR SPECIFY, GIVE:

1. Product Code ..... JH
2. Size .....
3. Length L
4. Material .....

200907

MIDWEST FASTENERS, INC

450 Richard St, Miamisburg, OH 45342 | Toll Free: 800-852-8352 | Fax: 937-866-4174 | www.midwestfasteners.com

All information contained herein is subject to change without notice.

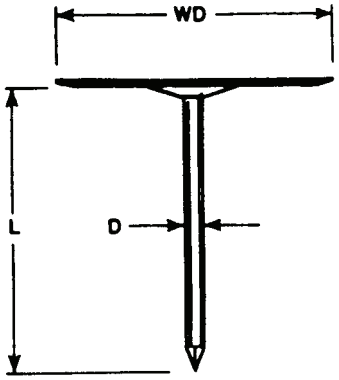

CUP HEAD PIN (CD)

TYPE	D	WD	MIN. L	MAX. L
CS12	.105	1.187	3/8	16"
CS14	.080	1.187	3/16	16"
CL12	.105	1.500	3/8	16"

	PIN	*WASHER*
MATERIAL:	**LOW CARBON STEEL** C - 0.23% max. P - 0.04% max. Mn - 0.90% max. S - 0.05% max.	**LOW CARBON STEEL** C - 0.23% max. P - 0.04% max. Mn - 0.90% max. S - 0.05% max.
MECHANICAL PROPERTIES:	Values available upon request.	Values available upon request.
PLATING:	Galvanized is standard. Copper plating is available upon special request.	Standard Washer is galvanized.

BEVEL: Washer edge is beveled to prevent cutting of insulation material.

STAINLESS STEEL:
Not standard, but available by special order.

PAPER INSULATING WASHERS:
Available for welding through foil faced insulation.
Paper insulating washers can be ordered separately or factory installed.

TO ORDER OR SPECIFY, GIVE:
1. Product Code..... CHSW
2. Size.....
3. Length L
4. Material .....

450 Richard St, Miamisburg, OH 45342 | Toll Free: 800-852-8352 | Fax: 937-866-4174 | www.midwestfasteners.com

All information contained herein is subject to change without notice.

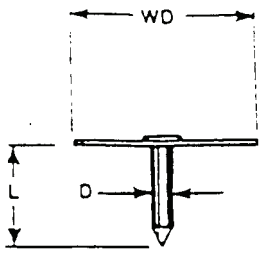

CUP HEAD PIN

APPLICATION: This cup head pin is for use with Duro-Dyne auto feed resistance welding equipment.

TYPE	D	WD	MIN. L
CM10	.135	1.000	3/8

	PIN	*WASHER*
MATERIAL:	**LOW CARBON STEEL** C - 0.23% max. P - 0.04% max. Mn - 0.90% max. S - 0.05% max.	**LOW CARBON STEEL** C - 0.23% max. P - 0.04% max. Mn - 0.90% max. S - 0.05% max.
MECHANICAL PROPERTIES:	Values available upon request.	Values available upon request.
PLATING:	Galvanized is standard. Copper plating is available upon special request.	Standard Washer is galvanized.
BEVEL:	Washer edge is beveled to prevent cutting of insulation material. Flat washer style also standard. Both styles Auto-Feed quality.	
STAINLESS STEEL:	Not standard, but available by special order.	

TO ORDER OR SPECIFY, GIVE:

1. Product Code ..... CHMW
2. Washer Type ..... Beveled or Flat
3. Length L
4. Material .....

MIDWEST FASTENERS, INC

450 Richard St, Miamisburg, OH 45342 | Toll Free: 800-852-8352 | Fax: 937-866-4174 | www.midwestfasteners.com

All information contained herein is subject to change without notice.

SELF-LOCKING WASHERS (Square)

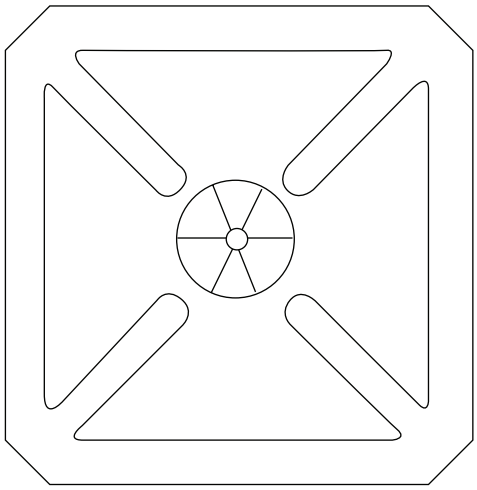

WA 250

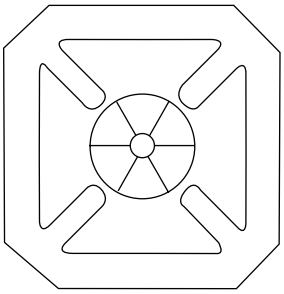

WS 150

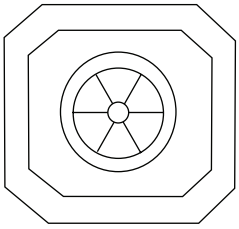

WA 125

Type	WA 250	WS 150	WA 125
Diameter	2-1/2 x 2-1/2	1-1/2 x 1-1/2	1-1/4 x 1-1/8
Thickness	.015 nom.	.015 nom.	.015 nom
Material	Mild Steel	Mild Steel	Mild Steel
Plating	Galv.	Galv.	Galv.
Edges / flat or beveled	beveled	beveled	beveled
Other materials available	Alum., S.S.	Alum., S.S.	Alum., S.S.
Packaged per carton	1000	1000	1000

MIDWEST FASTENERS Self-Locking Washers are used in conjunction with **MIDWEST FASTENERS** weld pins, insul-anchors and lacing anchors to fasten insulation in place. Simply press the self-locking washer onto the pin up to the insulation until the desired position is reached. Then clip off, (or bend over) the remaining portion of pin for a permanent attachment.

Both Round or Square self-locking washers are available as a matter of design or application preference. The domed, multi-lanced hole design provides for ease of locating washer on pin and positive locking. Most styles of washers are manufactured with a beveled edge to prevent the washer from cutting into the insulation facing.

MIDWEST FASTENERS Self-Locking Washers are available according to the chart above and with standard 10 GA, 12 GA, or 14 GA hole sizes off-the-shelf. Other material/plating combinations and hole sizes are available by special order.

TO ORDER OR SPECIFY, GIVE:

1. Product Code ..... WA, WS
2. Material ..... MS, SS, AL
3. Type 250, 150, 125
4. Diameter of pin/stud on which washer is to be used .....

450 Richard St, Miamisburg, OH 45342 | Toll Free: 800-852-8352 | Fax: 937-866-4174 | www.midwestfasteners.com

All information contained herein is subject to change without notice.

SELF-LOCKING WASHERS (Round)

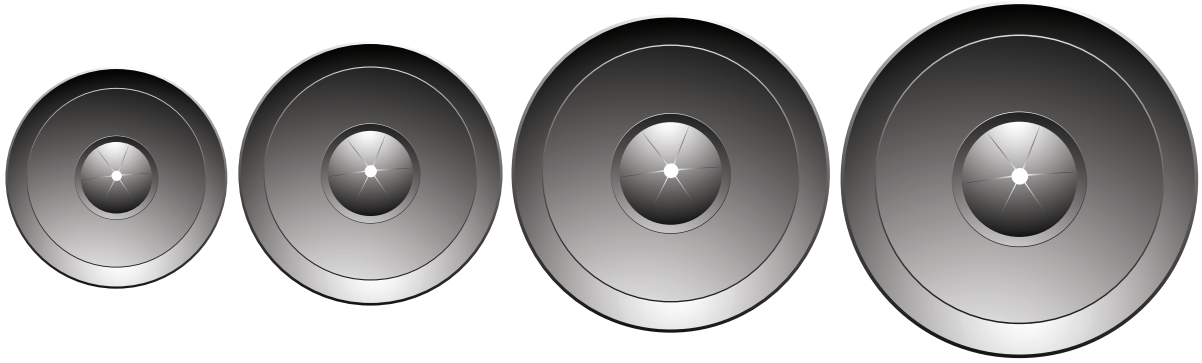

WA 100 WA 120 WA 150 WA 200

Type	WA 100	WA 120	WA 150	WA 200
Diameter	1"	1-3/16"	1-1/2"	2"
Thickness	.015 nom.	.015 nom.	.015 nom.	.015 nom
Material	Mild Steel	Mild Steel	Mild Steel	Mild Steel
Plating	Galv.	Galv.	Galv.	Galv.
Edges / flat or beveled	beveled	beveled	beveled	beveled
Other materials available	Alum., S.S.	Alum., S.S.	Alum., S.S.	Alum., S.S.
Packaged per carton	1000	1000	1000	1000

MIDWEST FASTENERS Self-Locking Washers are used in conjunction with **MIDWEST FASTENERS** weld pins, insul-anchors and lacing anchors to fasten insulation in place. Simply press the self-locking washer onto the pin up to the insulation until the desired position is reached. Then clip off, (or bend over) the remaining portion of pin for a permanent attachment.

Both Round or Square self-locking washers are available as a matter of design or application preference. The domed, multi-lanced hole design provides for ease of locating washer on pin and positive locking. Washers are manufactured with a beveled edge to prevent the washer from cutting into the insulation facing.

MIDWEST FASTENERS Self-Locking Washers are available according to the chart above and with standard 10 GA, 12 GA, or 14 GA hole sizes off-the-shelf. Other material/plating combinations and hole sizes are available by special order.

TO ORDER OR SPECIFY, GIVE:

1. Product Code ..... WA
2. Material ..... MS, SS, AL
3. Type ..... 100, 120, 150, or 200
4. Diameter of pin/stud on which washer is to be used .....

MIDWEST FASTENERS, INC

450 Richard St, Miamisburg, OH 45342 | Toll Free: 800-852-8352 | Fax: 937-866-4174 | www.midwestfasteners.com

All information contained herein is subject to change without notice.

MISCELLANEOUS INSULATION WASHERS

CAPPED SPEED WASHER

PCW

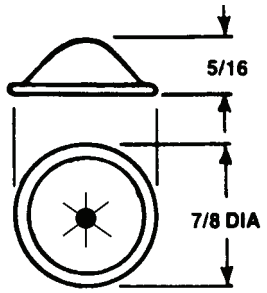

APPLICATION:

Designed to permanently lock on to weld pins or insul-anchors where appearance is a major factor, or where no sharp points or edges are permissible on the surface.

MATERIAL: Decorative Domed Cap—Aluminum
Self-Locking Insert—Hardened Steel

COLOR: Plain (bright aluminum) or painted white. Other painted colors are available by special order.

TO ORDER OR SPECIFY, GIVE:

1. Product Code.....PCW
2. Size.....10 GA, 12 GA or 14 GA
3. Color .....

LACING WASHER & RING

L2H
LRZA

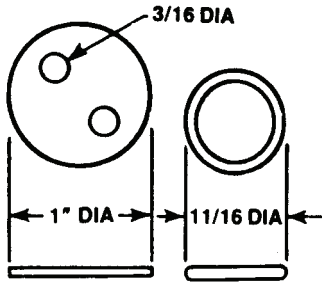

APPLICATION:

Designed to be used with lacing wire to wrap insulation around irregular shapes.

MATERIAL: Washer—Aluminum or Stainless Steel
Ring—Zinc alloy, bright zinc plated.

NO-AB: Washers are available stamped 'NO AB' to indicate non-asbestos material.

TO ORDER OR SPECIFY, GIVE:

Lacing Washer

1. Product Code..... L2H
2. Material .....

Lacing Ring

1. Product Code.....LRZA
2. Material .....Zinc Alloy

NAVY STUDS – WASHERS, CAPS & NUTS

MCAL

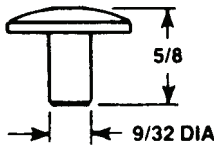

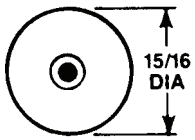

ANNULAR RING CAP (For annular ring studs)

APPLICATION:

Designed to permanently lock on to Navy annular ring studs.

MATERIAL: Aluminum, Mild Steel and Aluminum

SIZE: For or 3/16" diameter studs.

TO ORDER OR SPECIFY, GIVE:

1. Product Code..... MCAL
2. Size.....

WAK

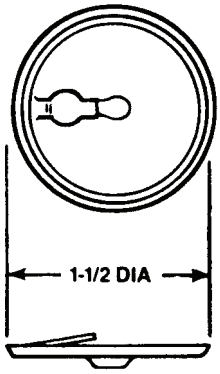

KEY HOLE SLOTTED WASHER
(For 3/16 dia. notched end studs)

APPLICATION:

Designed to lock on to Navy notched end studs.

MATERIAL: Mild Steel—Galvanized.

TO ORDER OR SPECIFY, GIVE:

1. Product Code.....WAK
2. Material .....

FLAT WASHERS & HEX NUTS (For all threaded studs)

These “accessory” items can be ordered with Threaded Weld Studs for general application and to meet Military Specifications where required.

MIDWEST FASTENERS, INC

450 Richard St, Miamisburg, OH 45342 | Toll Free: 800-852-8352 | Fax: 937-866-4174 | www.midwestfasteners.com

All information contained herein is subject to change without notice.

PANEL CAPS & NUTS

WAG AL

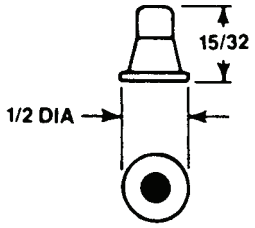

ANNULAR GROOVE CAP
(For annular groove shoulder studs)

APPLICATION:

Designed to permanently lock on to annular groove shoulder studs to hold panel in place against stud shoulder.

MATERIAL: Aluminum

SIZE: For 3/16 diameter annular groove

TO ORDER OR SPECIFY, GIVE:

1. Product Code.....WAG AL

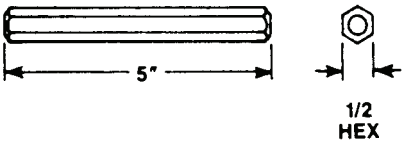

CAP SETTING TOOL (For installing WAG AL caps)

APPLICATION:

This tool is recommended for installing the Annular Groove Cap (above).

TO ORDER OR SPECIFY, GIVE:

1. Name .....Cap Setting Tool

PNAL

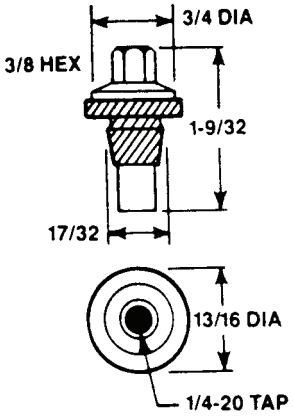

PANEL NUT (For 1/4-20 threaded studs)

APPLICATION:

Designed to be threaded down through pre-drilled holes in the panel on to pre-welded studs providing firm, water resistant attachment.

MATERIAL: Aluminum & Neoprene Rubber.

SIZE: For 1/4-20 threaded studs.

TO ORDER OR SPECIFY, GIVE:

1. Product Code..... PNAL

450 Richard St, Miamisburg, OH 45342 | Toll Free: 800-852-8352 | Fax: 937-866-4174 | www.midwestfasteners.com

All information contained herein is subject to change without notice.

COMBINATION NUTS

PAL-NUT

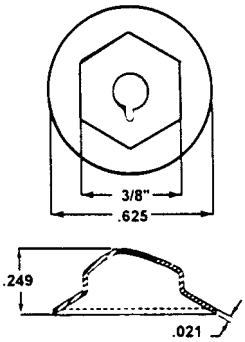

COMBINATION HEX-NUT and LOCK-WASHER ("OPEN")
for 10-24 threaded studs

APPLICATION: with 10-24 weld studs.
One-piece washer-type locknut combination serving as hex nut, lockwasher and flat washer. Locking design eliminates back-off due to vibration and thermal stress.

MATERIAL: Mild Steel. Zinc Plated.

SIZE: For 10-24 threaded studs

TO ORDER OR SPECIFY, GIVE:
1. Product Code.....PAL-NUT
2. Part Number.....D010241

HEX CAP NUT

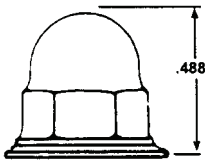

Style KD

COMBINATION HEX-NUT and LOCK-WASHER ("CLOSED")
for 10-24 threaded studs

APPLICATION: with 10-24 weld studs.
One-piece washer-type locknut combination serving as hex nut, lockwasher and flat washer. Design encloses fastener when placed on stud.

MATERIAL: Mild Steel. Nickel Plated.

SIZE: For 10-24 threaded studs

TO ORDER OR SPECIFY, GIVE:
1. Product Code..... CAP-NUT
2. Part Number.....KD102410

MIDWEST FASTENERS, INC
450 Richard St, Miamisburg, OH 45342 | Toll Free: 800-852-8352 | Fax: 937-866-4174 | www.midwestfasteners.com
All information contained herein is subject to change without notice.

SPINDLE

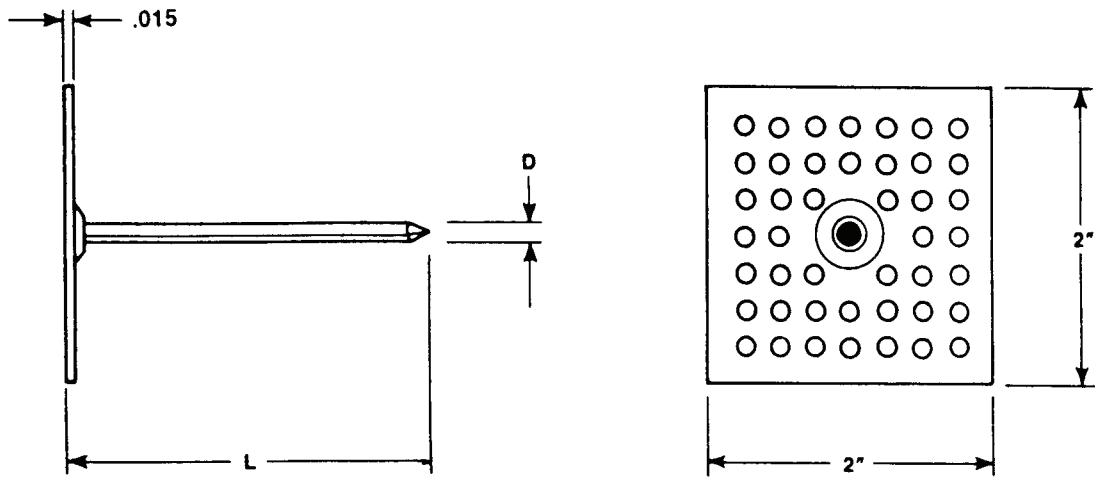

SIZE:	D	12 GA (.105") is standard. Other sizes available by special order only.
LENGTH:	L	1", 1-5/8", 2", 2-1/2", 3-1/2", 4-1/2", 5-1/2". 6-1/2", 8" and 9" are standard. Other lengths available by special order.

	PIN
MATERIAL:	LOW CARBON STEEL
PLATING:	Galvanized coating is standard.

	PLATE	***OTHER MATERIALS***
MATERIAL:	LOW CARBON STEEL	Also available by special order in all Stainless Steel or all Aluminum
PLATING:	Galvanized is standard.	

WASHERS: Self-locking washers are available in a variety of sizes, shapes, and materials.

TO ORDER OR SPECIFY, GIVE:

1. Product Code ..... IHSP
2. Size ..... 12 GA
3. Length L
4. Material ..... (if other than standard)

450 Richard St, Miamisburg, OH 45342 | Toll Free: 800-852-8352 | Fax: 937-866-4174 | www.midwestfasteners.com

All information contained herein is subject to change without notice.

SELF-STICK

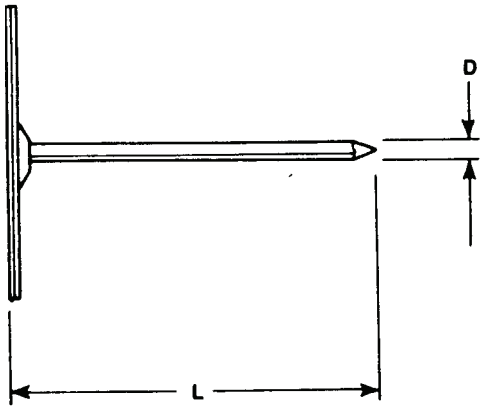

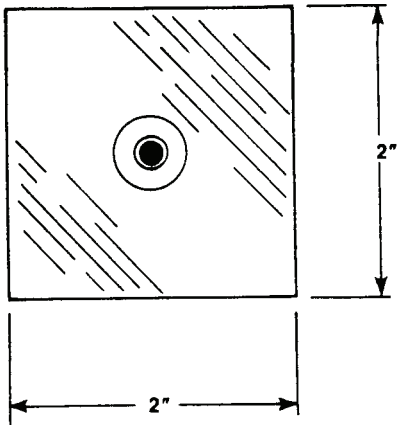

SIZE:	D	12 GA (.105") is standard. Other sizes available by special order only.
LENGTH:	L	1", 1-5/8", 2", 2-1/2", 3-1/2", 4-1/2", 5-1/2". 6-1/2", 8" and 9" are standard. Other lengths available by special order.

	PIN
MATERIAL:	LOW CARBON STEEL
PLATING:	Galvanized coating is standard.

	PLATE	***OTHER MATERIALS***
MATERIAL:	LOW CARBON STEEL	Also available by special order in all Stainless Steel or all Aluminum
PLATING:	Galvanized coating is standard.	

WASHERS: Self-locking washers are available in a variety of sizes, shapes, and materials.

TO ORDER OR SPECIFY, GIVE:

1. Product Code ..... IHSS
2. Size ..... 12 GA
3. Length L
4. Material ..... (if other than standard)

MIDWEST FASTENERS, INC

450 Richard St, Miamisburg, OH 45342 | Toll Free: 800-852-8352 | Fax: 937-866-4174 | www.midwestfasteners.com

All information contained herein is subject to change without notice.

IMPORTANT NOTICE TO PURCHASER

All statements, technical information and recommendations contained herein are based on facts we believe to be reliable, but the accuracy or completeness thereof is not guaranteed, and the following is made in lieu of all warranties, express or implied.

Seller's and manufacturer's only obligation shall be to replace such quantity of the product proved to be defective. Neither seller nor manufacturer shall be liable for any injury, loss or damage, direct or consequential, arising out of the use of or the inability to use the product.

Before using, user shall determine the suitability of the product for his intended use and user assumes all risk and liability whatsoever in connection therewith.

No statement or recommendation not contained herein shall have any force or effect unless in an agreement signed by officers of seller and manufacturer.

GUIDELINES FOR SELF STICK INSUL-ANCHORS

1. Must be applied to a clean, non-porous surface, that is free of all oil, film, dust, rust, etc.
2. Not generally recommended on painted surfaces, drywall, nor ceilings of metal buildings.
3. Best results are obtained when ambient temperature is above 40 degrees F. at time of application.
4. Temperature range for the foam tape is from -20 degrees to +180 degrees F.
5. Loading should not exceed 3 lbs. per anchor (.75 lb./sq. inch).
6. Base must be applied with firm pressure. Do not twist during application. Do not remove release (backing) paper until ready to use.
7. Insulation may be applied immediately after bond is made.

450 Richard St, Miamisburg, OH 45342 | Toll Free: 800-852-8352 | Fax: 937-866-4174 | www.midwestfasteners.com

All information contained herein is subject to change without notice.

NYLON

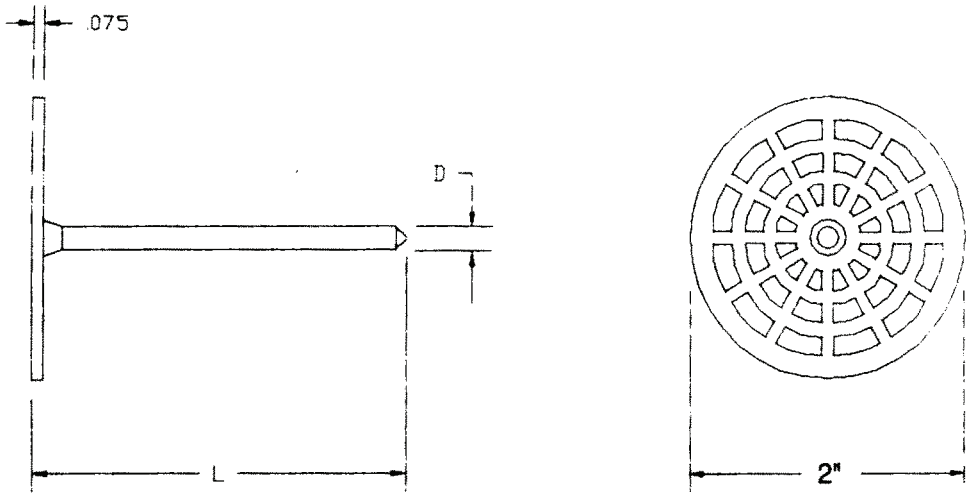

SIZE:	D	5/32" Standard
LENGTH:	L	2-1/2" Standard
MATERIAL:	This is a one-piece insul-anchor of molded nylon.	

FEATURES:

- Can be used for insulation up to 2" thick.
- Has a base area 14% larger than similar nylon anchors with a round base.
- Has 21% more perforated area for glue extrusion than similar nylon anchors.
- Uses 30% less adhesive than metal insul-anchors with a 2" round base.
- Will not conduct heat or cold.
- Lighter in weight than metal anchors for ease of handling.

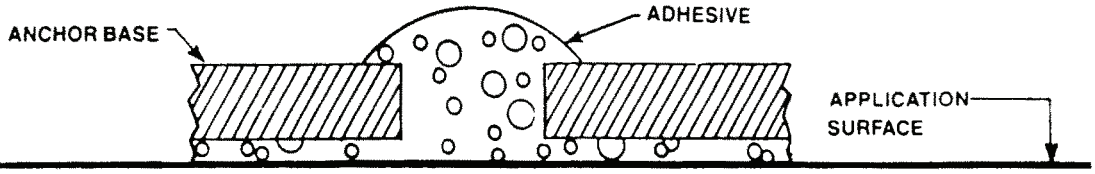

WASHERS: The self-locking washer for use with this insul-anchor is the WAMS-120-156. These washers are packed with anchors.

TO ORDER OR SPECIFY, GIVE:

1. Product Code.....IHNY

MIDWEST FASTENERS, INC

450 Richard St, Miamisburg, OH 45342 | Toll Free: 800-852-8352 | Fax: 937-866-4174 | www.midwestfasteners.com

All information contained herein is subject to change without notice.

ANNULAR RING ANCHOR-BOLT

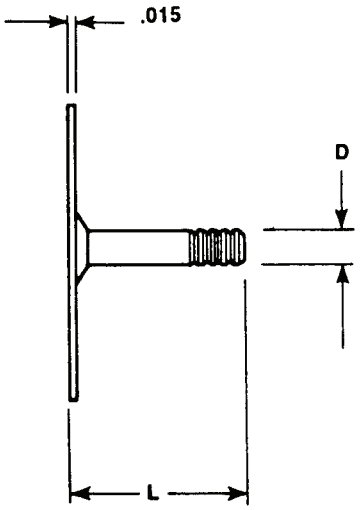

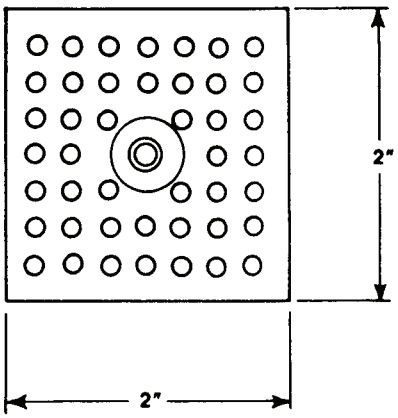

SIZE:	D	3/16 nominal. Actual ring diameter is .175".
LENGTH:	L	7/8, 1-7/8, 2-7/8, and 3-7/8 are standard. Other lengths available by special order.

	PLATE	***BOLT***
MATERIAL:	LOW CARBON STEEL	LOW CARBON STEEL
PLATING:	Galvanized is standard.	Copper plating is standard.

OTHER MATERIALS:

Available by special order only.

RETAINING CAP:

The cap for use with this anchor-bolt is the MCAL part no. MCAL-625-875.

TO ORDER OR SPECIFY, GIVE:

1. Product Code.....IHAB
2. Size.....D
3. Length L
4. Material .....(if other than standard)

450 Richard St, Miamisburg, OH 45342 | Toll Free: 800-852-8352 | Fax: 937-866-4174 | www.midwestfasteners.com

All information contained herein is subject to change without notice.

THREADED ANCHOR-BOLT

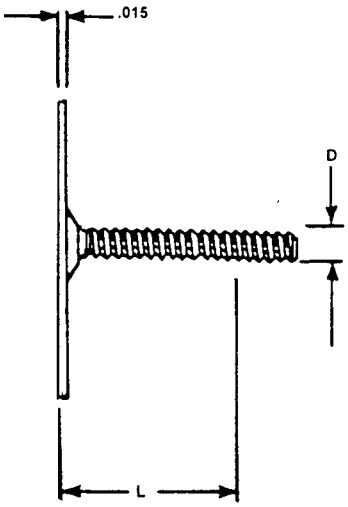

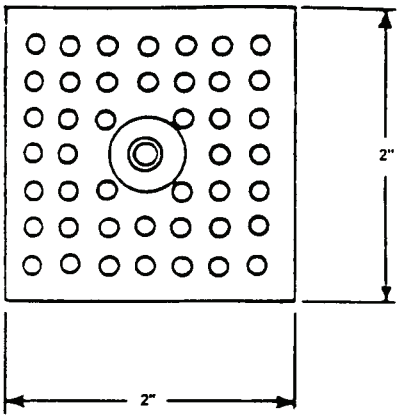

SIZE:	D	#10-24 is standard. Other sizes available by special order.
LENGTH:	L	3/4" to 3" long, in 1/4" increments as standard. Other lengths available by special order.

	PLATE	***BOLT***
MATERIAL:	LOW CARBON STEEL	LOW CARBON STEEL
PLATING:	Galvanized plating is standard.	Copper plating is standard.

OTHER MATERIALS:

Available by special order only.

HARDWARE:

Hex nuts, flat washers and lock washers are available in a variety of materials.

TO ORDER OR SPECIFY, GIVE:

1. Product Code.....IA AB-THD
2. Size.....D
3. Length L
4. Material .....(if other than standard)

MIDWEST FASTENERS, INC

450 Richard St, Miamisburg, OH 45342 | Toll Free: 800-852-8352 | Fax: 937-866-4174 | www.midwestfasteners.com

All information contained herein is subject to change without notice.

SAFING "Z" CLIP

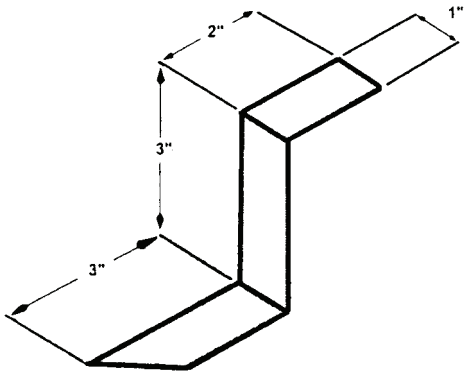

SIZE: 2" x 3" x 3" x 1" standard size

LENGTH: 20 Gauge, Mild Steel

PLATING: Galvanized is standard.

APPLICATION: For use in installation of fire barrier and sound barrier safing insulations.
This non-welded fastener is used as a support bracket to impale and secure Insulating materials between floor slab and spandrels at floor edge or anywhere that support for material is required.

STANDARD PACKAGING:

500 per carton (43lbs. carton weight - approximately)

TO ORDER OR SPECIFY, GIVE:

1. Product Code.....ZCLIP
2. Size.....(if other than standard)
3. Material .....(if other than standard)

450 Richard St, Miamisburg, OH 45342 | Toll Free: 800-852-8352 | Fax: 937-866-4174 | www.midwestfasteners.com

All information contained herein is subject to change without notice.

MIDWEST Fasteners
IHA-177 INSULATION HANGER ADHESIVE

Product Data:

MIDWEST Fasteners HANGER ADHESIVE is a high strength, heavy-bodied adhesive, specifically formulated for adhering anchors for hanging insulation.

IHA-177 HANGER ADHESIVE bonds metal and nylon anchors to metal, concrete or masonry surfaces. The product can also be used to install metal or ceramic wall fixtures and in tile applications.

MIDWEST Fasteners HANGER ADHESIVE is also available for use as a general-purpose construction adhesive in applications requiring a high strength bond, or in applications subjected to high temperatures.

Special Characteristics:

- Excellent thermal shock resistance
- High bond strength
- Water resistant
- Immediate grab
- Mildew resistant
- Non-slip formula

TYPICAL PHYSICAL PROPERTIES AND TECHNICAL INFORMATION:

Base: Thermoplastic Rubber
Type: Solvent
Solids Content: 64%
Color: Light Brown
Weight/gallon: 9.0 lbs./gal.
Shear Strength: Greater than 600 psi (AFG 01)
Water Resistance: Excellent
Consistency: Gun Grade Mastic
Application Temperature: 30°F to 120°F
Extrudability: Excellent (ASTM C 731)
Service Temperature: -30°F to 250°F
Shelf Life: 12 months
Storage Temp: Store at room temperature with cross ventilation.
Clean-up: Mineral Spirits, exercising safe practices
OSHA Class 1B liquid. Store per 29 CFR 1910, 106.
Coverage: 500-1000 anchors per gallon
Flammability: Flammable, Red Label
Flash point: (ASTM D 3828) -9°F
Open time: 15 minutes at 75°F and 50% relative humidity

450 Richard St, Miamisburg, OH 45342 | Toll Free: 800-852-8352 | Fax: 937-866-4174 | www.midwestfasteners.com

All information contained herein is subject to change without notice.

MIDWEST Fasteners IHA-177 INSULATION HANGER ADHESIVE

DIRECTIONS FOR USE:

1. Use only after careful consideration of the warnings, directions, and first aid instructions given.

2. Surface Preparation: Surfaces to be bonded should be clean, dry and free of any dust, frost, wax, moisture, dirt, grease, oil, rust, or other contaminants. Do not use over painted surfaces. Many protective coatings are not compatible with Anchor Adhesive.

3. Adhesive Preparation: Adhesive should be stored at room temperature (60ºF to 80ºF) for at least 24 hours prior to use.

4. Working Temperature: For best results, adhesive and materials to be bonded should be 30ºF to 120ºF.

5. Adhesive Application: Do not apply at temperatures below 30ºF. Prepare and install one anchor at a time. Apply a dab (the size of a small walnut) of adhesive to the anchor base with a putty knife and immediately (maximum open time is 10 minutes) press anchor firmly into place, with a slight twisting motion. For proper adhesion, insure that the film of adhesive covering the anchor base (after the anchor has been firmly pressed into place) is protruding

6. Installing Anchor Adhesive to Concrete Surfaces: New concrete surfaces need to cure a minimum of 28 days in order to ensure best adhesion. All concrete surfaces should be high pressure water blasted or sand blasted to remove any surface curing agents and all foreign matter. Spread anchor adhesive on anchor base allowing solvent to flash off for several minutes before pressing anchor firmly into place with a slight twisting motion. Do not apply load until application is completely dry.

PACKAGING INFORMATION

SIZE	PACKED	PART #	WEIGHT
GALLON	4/carton	IHA-177-GA	39lbs. /carton

*MIDWEST Fasteners does not ship IHA-177 Adhesive by Air; standard shipments are UPS or Motor Freight.
Also sold by MIDWEST only in carton-lot quantities.

450 Richard St, Miamisburg, OH 45342 | Toll Free: 800-852-8352 | Fax: 937-866-4174 | www.midwestfasteners.com

All information contained herein is subject to change without notice.

CAUTIONARY INFORMATION

Contains: Toluene and Silica, Quartz

Warning: This product contains Silica, Quartz, a chemical known to the State of California to cause cancer. This product contains Toluene a chemical known to the State of California to cause birth defects or other reproductive harm. Cancer Hazard: Contains Crystalline Silica which may cause cancer. Risk of cancer depends on duration and level of exposure.
VAPOR HARMFUL, MAY AFFECT THE BRAIN OR NERVOUS SYSTEM CAUSING DIZZINESS, HEADACHE OR NAUSEA. CAUSES EYE, SKIN, NOSE AND THROAT IRRITATION. MAY BE HARMFUL IF ABSORBED THROUGH SKIN.

NOTICE: Reports have associated repeated and prolonged occupational overexposure to solvents with permanent brain and nervous system damage. Intentional misuse by deliberately concentrating and inhaling the content may be harmful or fatal. Use only with adequate ventilation: Vapors may ignite explosively. Do not breathe dust, vapors or spray mist. Ensure fresh air entry during application and drying. If you experience eye watering, headache or dizziness or if monitoring demonstrates vapor/mist levels are above applicable limits, wear an appropriate, properly fitted respirator (NIOSH/MSHA approved) during and after application. Follow respirator manufacturer's directions for respirator use. Close container after each use. Keep away from heat, sparks and flame: Do not smoke. Extinguish all flames and pilot lights, and turn off stoves, heaters, electric motors and other sources of ignition during use and until all vapors are gone. Prevent build-up of vapors by opening all windows and doors to achieve cross-ventilation. Avoid contact with eyes, skin and clothing. Wash thoroughly after handling. VAPORS MAY CAUSE FLASH FIRE.
First Aid: If you experience difficulty in breathing, leave the area to obtain fresh air. If continued difficulty is experienced, get medical assistance immediately. In case of eye contact, flush immediately with plenty of water for at least 15 minutes and get medical attention immediately; for skin, wash thoroughly with soap and water. If swallowed, do not induce vomiting. Call Poison Control Center, Hospital Emergency Room or Physician immediately. If spilled: Contain spilled material and remove with inert absorbent. Dispose of contaminated absorbent, container and unused contents in accordance with local, state and Federal regulations.

KEEP OUT OF THE REACH OF CHILDREN F#2100 L210v1
Notice to Purchaser: NO WARRANTIES, EXPRESS OR IMPLIED ARE MADE INCLUDING MERCHANTABILITY AND/OR FITNESS FOR A PARTICULAR PURPOSE. UNDER NO CIRCUMSTANCES SHALL THE MANUFACTURER BE LIABLE FOR ANY LOSS OR DAMAGE ARISING FROM THE PURCHASE, USE, OR INABILITY TO USE THIS PRODUCT, OR FOR ANY SPECIAL, INDIRECT INCIDENTAL, OR CONSEQUENTIAL DAMAGES. IF SUCH TESTING PROVES A PRODUCT DEFECT, THE USER'S SOLE AND EXCLUSIVE REMEDY IS EITHER REIMBURSEMENT OF THE PURCHASE PRICE OF THE PRODUCT OR REPLACEMENT OF THE CONTAINER OF PRODUCT. NO FABRICATOR, INSTALLER, DEALER, AGENT OR EMPLOYEE HAS THE AUTHORITY TO MODIFY THE OBLIGATIONS OR LIMITATION OF THIS WARRANTY.
This warranty gives you specific legal rights, and you may also have other rights which vary from state to state; therefore, some of the limitations stated above may not apply to you. It is to your benefit to save your documentation upon purchase of a product. Rev. 03-07

MIDWEST FASTENERS, INC
450 Richard St, Miamisburg, OH 45342 | Toll Free: 800-852-8352 | Fax: 937-866-4174 | www.midwestfasteners.com
All information contained herein is subject to change without notice.

LACING ANCHOR

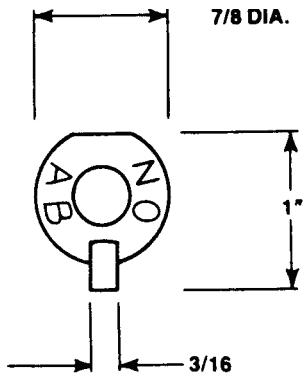

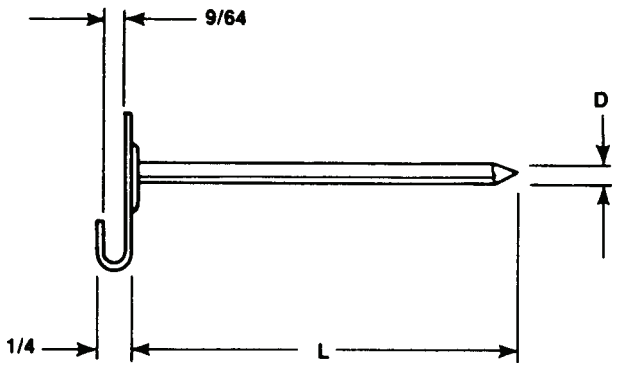

SIZE:	D	12 GA & 14 GA are standard. Other sizes are available by special order.
LENGTH:	L	2-1/2" & 4-1/2" are standard. Other lengths available by special order.
MATERIAL:	LOW CARBON STEEL	STAINLESS STEEL
PLATING:	Zinc plating is standard.	Does not apply to stainless.

OTHER MATERIALS:

Available by special order only.

WASHERS: Self-locking washers are available in a variety of sizes, shapes, and materials.

TO ORDER OR SPECIFY, GIVE:

1. Product Code.....LA
2. Size.....D
3. Length L
4. Material .....(if other than standard)

450 Richard St, Miamisburg, OH 45342 | Toll Free: 800-852-8352 | Fax: 937-866-4174 | www.midwestfasteners.com

All information contained herein is subject to change without notice.

SLIM LACING ANCHOR

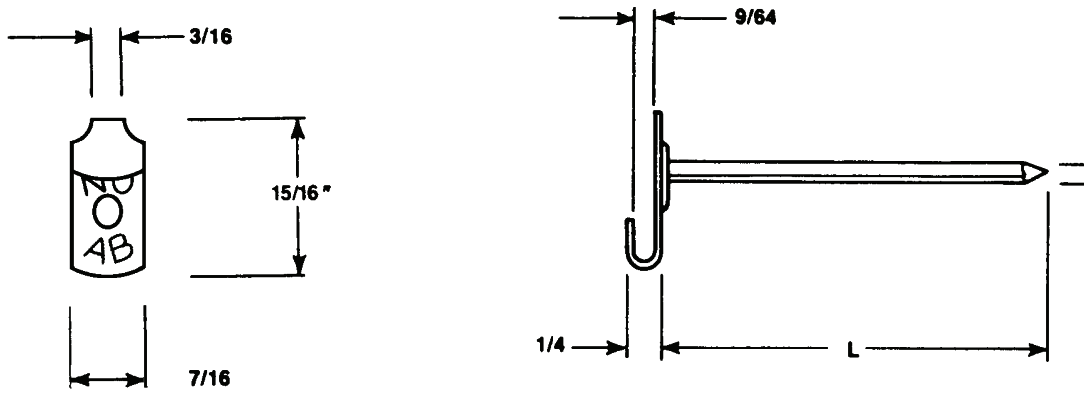

SIZE:	D	12 GA & 14 GA are standard. Other sizes are available by special order.
LENGTH:	L	2-1/2" & 4-1/2" are standard. Other lengths available by special order.
MATERIAL:	LOW CARBON STEEL	STAINLESS STEEL
PLATING:	Zinc plating is standard.	Does not apply to stainless.
NO-AB:	Furnished stamped NO AB to indicate non-asbestos material.	

OTHER MATERIALS:

Available by special order only.

WASHERS: Self-locking washers are available in a variety of sizes, shapes, and materials.

TO ORDER OR SPECIFY, GIVE:

1. Product Code ..... LS
2. Size ..... D
3. Length L
4. Material .....(if other than standard)

MIDWEST FASTENERS, INC

450 Richard St, Miamisburg, OH 45342 | Toll Free: 800-852-8352 | Fax: 937-866-4174 | www.midwestfasteners.com

All information contained herein is subject to change without notice.

BERGEN HOOK

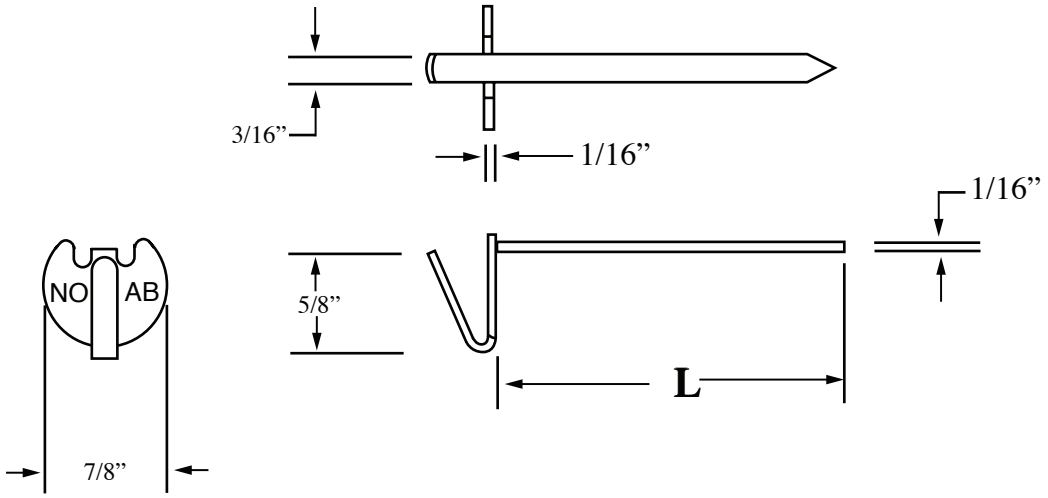

SIZE:	Flat Stock	3/16” X 1/16” dimensions are standard.
LENGTH:	L	2-1/2” and 4” lengths are standard.
MATERIAL:	LOW CARBON STEEL	STAINLESS STEEL
PLATING:	Zinc plating is standard.	Does not apply to stainless.

OTHER MATERIALS:

Available by special order only, based on requirements and quantities.

WASHERS: Self-locking washers are available in 1-3/16” round (K120) size for use with this anchor as shown below.

TO ORDER OR SPECIFY, GIVE:

1. Product Code .....BH
2. Lenth L
3. Materail .....

PART NO. WAMS-120-BH ***SELF-LOCKING WASHER***

WASHER: Sold separately, not a componet part of anchor.
MATERIAL: Mild Steel, Stainless Steel

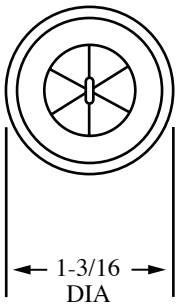

450 Richard St, Miamisburg, OH 45342 | Toll Free: 800-852-8352 | Fax: 937-866-4174 | www.midwestfasteners.com

All information contained herein is subject to change without notice.

QUILTING PIN

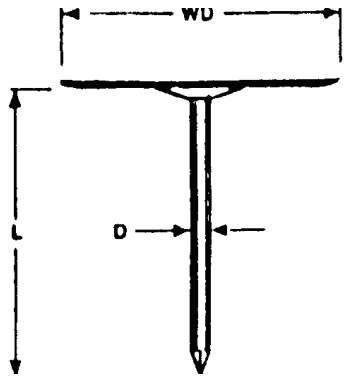

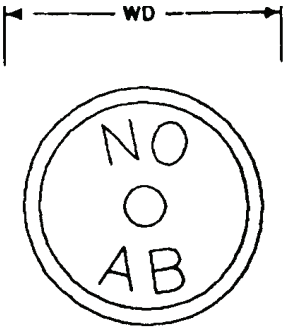

SIZE:	D	12 GA & 14 GA are standard. Other sizes are available by special order.	
	WD	1.187" diameter washer is standard.	
LENGTH:	L	2-1/2" & 4-1/2" are standard. Other lengths available by special order.	
MATERIAL:	LOW CARBON STEEL		STAINLESS STEEL
PLATING:	Does not apply to Low Carbon.		Does not apply to stainless.

OTHER MATERIALS:

Available by special order only.

WASHERS: Self-locking washers are available in a variety of sizes, shapes, and materials.

TO ORDER OR SPECIFY, GIVE:

1. Product Code.....QP
2. Size.....D
3. Length L
4. Material .....(if other than standard)

MIDWEST FASTENERS, INC

450 Richard St, Miamisburg, OH 45342 | Toll Free: 800-852-8352 | Fax: 937-866-4174 | www.midwestfasteners.com

All information contained herein is subject to change without notice.

LACING ACCESSORIES

LA HOOK

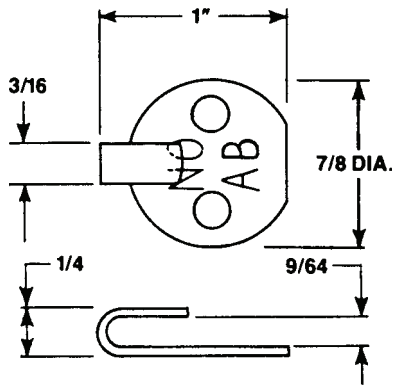

LACING HOOK

SIZE:	One size as shown.
MATERIAL:	Stainless Steel.
NO-AB:	Furnished stamped NO AB to indicate non-asbestos material.

TO ORDER OR SPECIFY, GIVE:

1. Product Code.....LAH
2. Material .....

LA L100

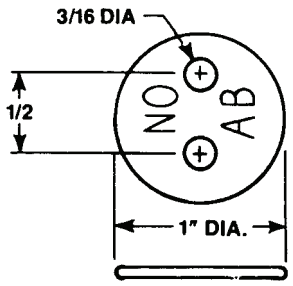

L100 LACING WASHER

SIZE:	One size as shown.
MATERIAL:	Aluminum or Stainless Steel
NO-AB:	Available stamped NO AB to indicate non-asbestos material.

TO ORDER OR SPECIFY, GIVE:

1. Product Code..... L2H
2. Material .....

LA RING

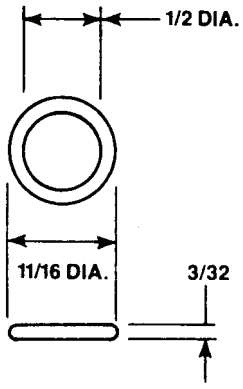

LACING RING

SIZE:	One size as shown.
MATERIAL:	Zinc alloy - bright zinc plated

TO ORDER OR SPECIFY, GIVE:

1. Product Code.....LRZA

SureIIShot

The MIDWEST ultralight pin welder--SureShot II -- welds Cupheads, Weld Pins and Weld Studs up to 5/16" weld base. Featuring Hybrid Power Technology and Dual Operating Power, SureShot II is the most up-to-date Capacitor Discharge pin welder for all applications. Lightweight and rugged, SureShot II has the power to apply virtually any fastener used in the CD Insulation market: with only 110volt (or 220volt) incoming power.
Weight: 18lbs. Dimensions: 13.7" W X 11.6" D X 6" H

EAGLE

MIDWEST Fasteners' basic pin welder, is a solid-state Capacitor Discharge studwelder. Capable of welding Weld Pins and Weld Studs up to 1/4" weld base in Mild Steel, Stainless & Aluminum materials, EAGLE's standard features make it both portable and flexible for all standard applications.
Weight: 26 lbs. Dimensions: 10" W X 13" D X 8-1/2" H

TALON

MIDWEST's standard Cuphead portable, the TALON includes all the features of the EAGLE pin system, plus Cuphead components and capability making this one of the key Insulator machines in the MIDWEST line.
Weight: 29 lbs. Dimensions: 10" W X 13" D X 8-1/2" H

CAPACITOR DISCHARGE STUD WELDER CD80

The mid-line portable from MIDWEST Fasteners, the CD80 targets jobshop users and field insulators where more power is required. With weld capacity up to a 5/16" weld base, the CD80 incorporates higher capacity welding in a Capacitor Discharge 110volt system.
Weight: 56 lbs. Dimensions: 13-1/2" W X 21" D X 9" H

CD700 CAPACITOR DISCHARGE STUD WELDER

One of MIDWEST's heavy-duty portables, the CD700 is a 110volt Capacitor Discharge system capable of all-type Weld Pins, CD Weld Studs, and Cuphead through-Insulation fasteners. With weld base capacity including 3/8" diameter, the CD700 can also weld Power Base pins to rust covered or contaminated surfaces.
Weight: 66 lbs. Dimensions: 13-1/2" W X 21" D X 9" H

CAPACITOR DISCHARGE STUD WELDER CD100

For jobshop or in-the-field use, MIDWEST's CD100 is a heavy-duty portable Capacitor Discharge machine. With weld base capability including 3/8" diameter, the CD100 can affix Weld Studs and Weld Pins (including heavy-duty Power tips) in Mild Steel, Stainless & Aluminum, using only 110volt power.
Weight: 66 lbs. Dimensions: 13-1/2" W X 21" D X 9" H

MIDWEST FASTENERS, INC.
450 Richard St. • Miamisburg, OH 45342
e-mail: sales@midwestfasteners.com
website: www.midwestfasteners.com
Toll Free: 800-852-8352 • Fax: 937-866-4174